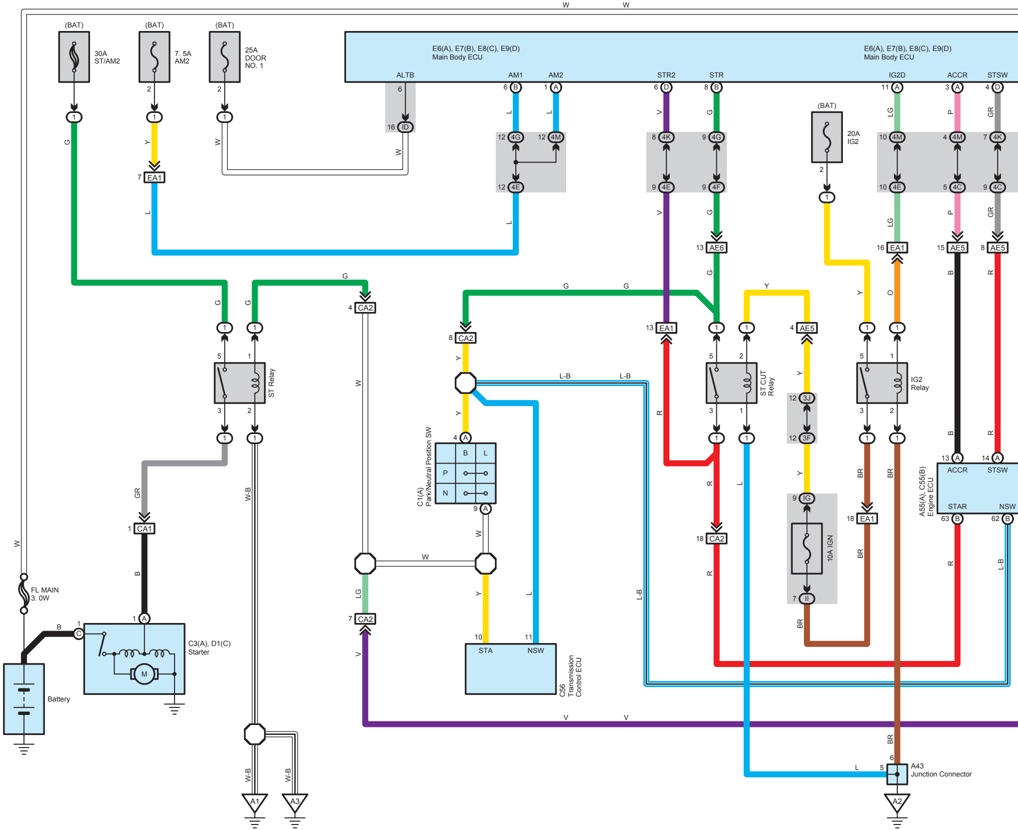
W
W
(BAT)
30A
ST/AM2
(BAT)
7. 5A
AM2
(BAT)
25A
DOOR
NO. 1
E6(A), E7(B), E8(C), E9(D)
Main Body ECU
ALTB
AM1
AM2
STR2
STR
E6(A), E7(B), E8(C), E9(D)
Main Body ECU
IG2D
ACCR
STSW
(BAT)
20A
IG2
ID
4G
4M
4E
4K
4G
4E
4F
4M
4M
4K
4E
4C
4C
EA1
AE6
EA1
AE5
AE5
CA2
CA2
EA1
AE5
ST Relay
ST CUT
Relay
IG2
Relay
3J
3F
IG
10A IGN
II
C1(A)
Park/Neutral Position SW
B
L
P
N
CA1
CA2
CA2
EA1
A55(A), C55(B)
Engine ECU
ACCR
STSW
STAR
NSW
FL MAIN
3. 0W
Battery
C3(A), D1(C)
Starter
M
STA
NSW
C56
Transmission
Control ECU
A43
Junction Connector
A1
A3
A2
G
Y
L
W-B
GR
B
LG
V
R
BR
O
P
L-B

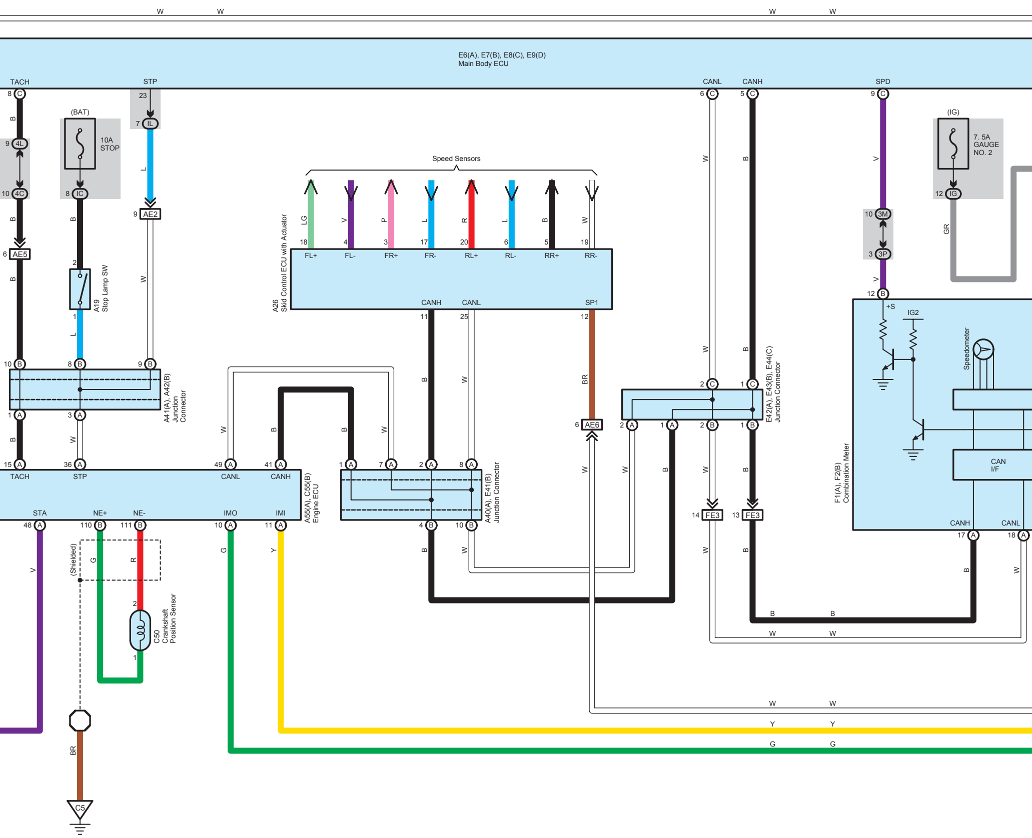
W
W
W
W
E6(A), E7(B), E8(C), E9(D)
Main Body ECU
TACH
STP
CANL
CANH
SPD
8 C
23
6 C
5 C
9 C
(BAT)
10A
STOP
7 IL
(IG)
7. 5A
GAUGE
NO. 2
9 4L
10 4C
8 IC
12 IG
9 AE2
10 3M
3 3P
6 AE5
Speed Sensors
LG
V
P
L
R
L
B
W
18
4
3
17
20
6
5
19
FL+
FL-
FR+
FR-
RL+
RL-
RR+
RR-
A26
Skid Control ECU with Actuator
CANH
CANL
SP1
11
25
12
A19
Stop Lamp SW
2
1
12 B
+S
IG2
Speedometer
10 B
8 B
9 B
A41(A), A42(B)
Junction
Connector
1 A
3 A
2 C
1 C
E42(A), E43(B), E44(C)
Junction Connector
6 AE6
2 A
1 A
2 B
1 B
15 A
36 A
49 A
41 A
1 A
7 A
2 A
8 A
TACH
STP
CANL
CANH
A55(A), C55(B)
Engine ECU
STA
NE+
NE-
IMO
IMI
A40(A), E41(B)
Junction Connector
48 A
110 B
111 B
10 A
11 A
4 B
10 B
14 FE3
13 FE3
F1(A), F2(B)
Combination Meter
CAN
I/F
CANH
CANL
17 A
18 A
(Shielded)
G
R
2
1
C50
Crankshaft
Position Sensor
V
G
Y
B
W
GR
BR
C5
B
B
W
W
W
W
Y
Y
G
G

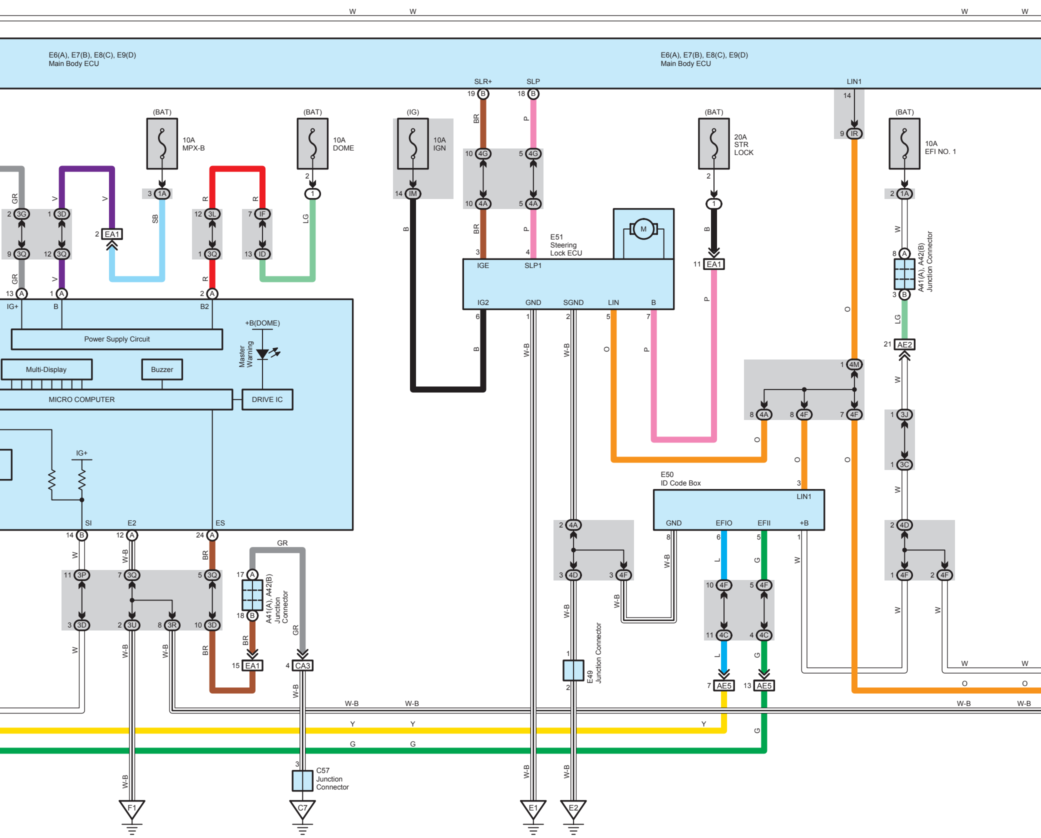
E6(A), E7(B), E8(C), E9(D)
Main Body ECU
E6(A), E7(B), E8(C), E9(D)
Main Body ECU
(BAT)
10A
MPX-B
(BAT)
10A
DOME
(IG)
10A
IGN
SLR+
SLP
(BAT)
20A
STR
LOCK
LIN1
(BAT)
10A
EFI NO. 1
E51
Steering
Lock ECU
M
IGE
SLP1
IG2
GND
SGND
LIN
B
A41(A), A42(B)
Junction Connector
AE2
IG+
B
B2
+B(DOME)
Master
Warning
Power Supply Circuit
Multi-Display
Buzzer
MICRO COMPUTER
DRIVE IC
IG+
SI
E2
ES
E50
ID Code Box
LIN1
GND
EFIO
EFII
+B
A41(A), A42(B)
Junction
Connector
EA1
CA3
AE5
AE5
E49
Junction Connector
C57
Junction
Connector
F1
C7
E1
E2
W
W-B
Y
G
O
GR
V
R
SB
LG
BR
P
L

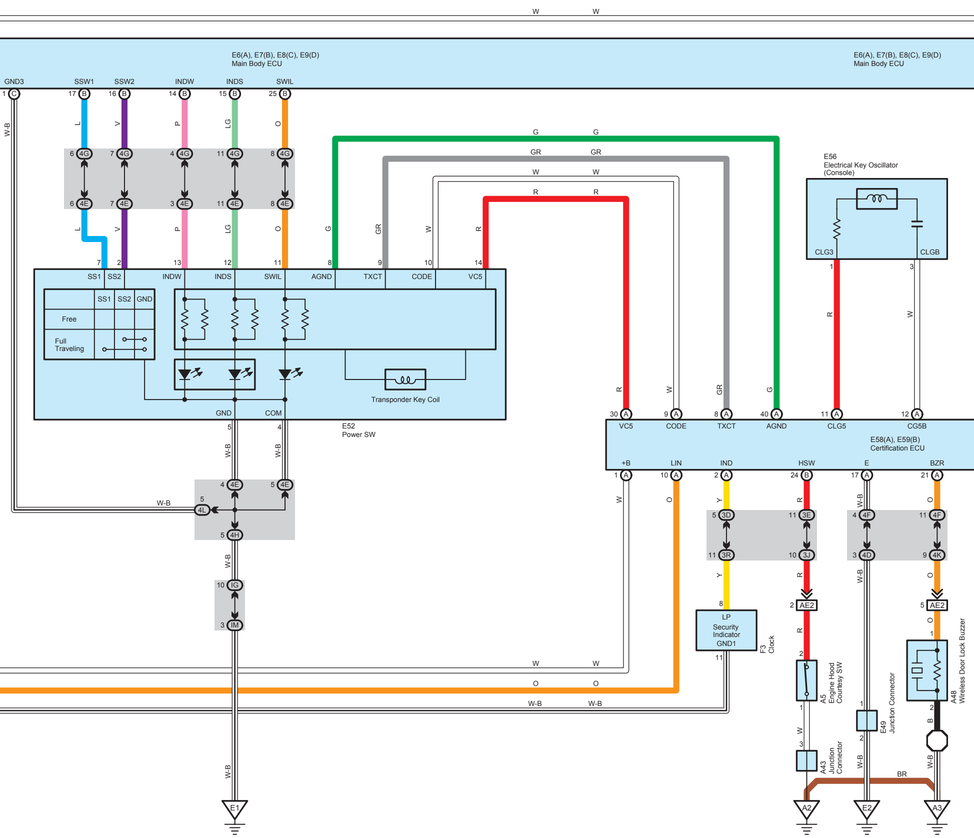
W
W
E6(A), E7(B), E8(C), E9(D)
Main Body ECU
E6(A), E7(B), E8(C), E9(D)
Main Body ECU
GND3
SSW1
SSW2
INDW
INDS
SWIL
1 C
17 B
16 B
14 B
15 B
25 B
W-B
L
V
P
LG
O
6 4G
7 4G
4 4G
11 4G
8 4G
6 4E
7 4E
3 4E
11 4E
8 4E
G
G
GR
GR
W
W
R
R
E56
Electrical Key Oscillator
(Console)
CLG3
CLGB
1
3
7
2
13
12
11
8
9
10
14
SS1
SS2
INDW
INDS
SWIL
AGND
TXCT
CODE
VC5
SS1
SS2
GND
Free
Full
Traveling
Transponder Key Coil
GND
COM
E52
Power SW
5
4
W-B
W-B
4 4E
5 4E
5 4L
5 4H
10 IG
3 IM
E1
30 A
9 A
8 A
40 A
11 A
12 A
VC5
CODE
TXCT
AGND
CLG5
CG5B
E58(A), E59(B)
Certification ECU
+B
LIN
IND
HSW
E
BZR
1 A
10 A
2 A
24 B
17 A
21 A
Y
5 3D
11 3R
11 3E
10 3J
4 4F
3 4D
11 4F
9 4K
8
LP
Security
Indicator
GND1
11
F3
Clock
2 AE2
5 AE2
2
1
3
A5
Engine Hood
Courtesy SW
A43
Junction
Connector
E49
Junction Connector
A48
Wireless Door Lock Buzzer
B
BR
A2
E2
A3
W
W
O
O
W-B
W-B

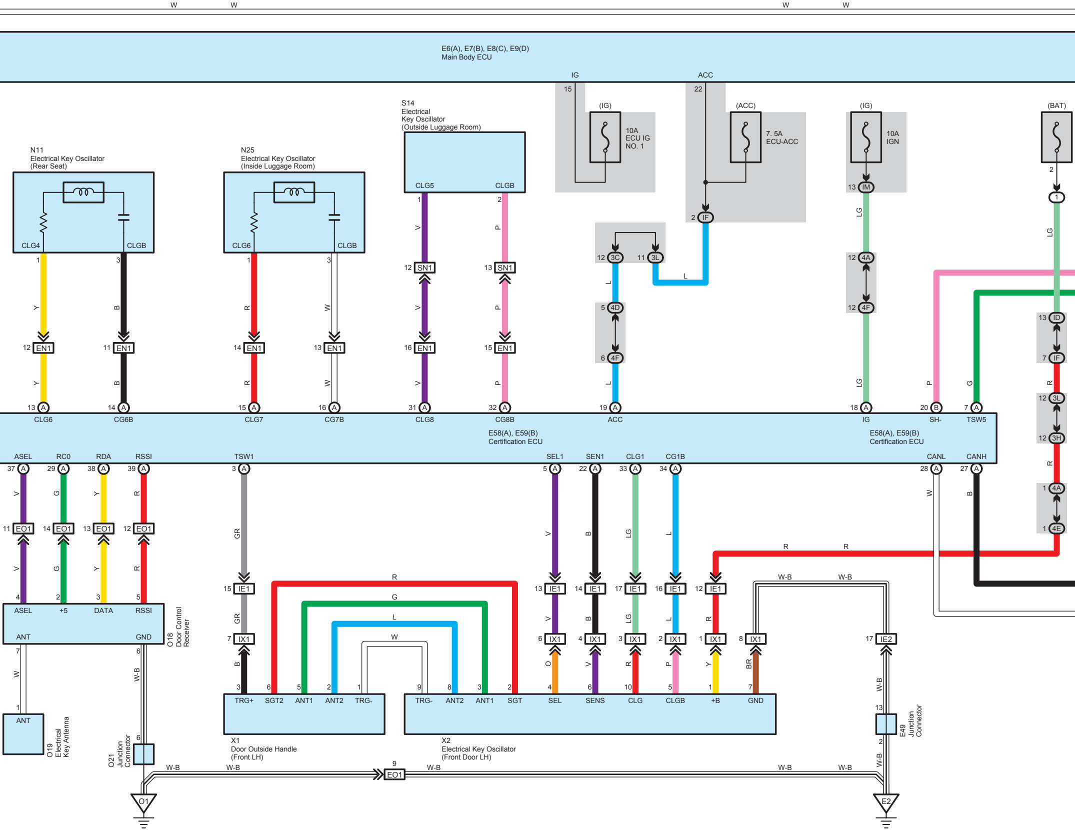
W
W
W
W
E6(A), E7(B), E8(C), E9(D)
Main Body ECU
IG
ACC
15
22
(IG)
10A
ECU IG
NO. 1
(ACC)
7. 5A
ECU-ACC
(IG)
10A
IGN
(BAT)
2
1
13 IM
S14
Electrical
Key Oscillator
(Outside Luggage Room)
CLG5
CLGB
N11
Electrical Key Oscillator
(Rear Seat)
CLG4
CLGB
N25
Electrical Key Oscillator
(Inside Luggage Room)
CLG6
CLGB
2 IF
12 3C
11 3L
L
5 4D
6 4F
12 4A
12 4F
13 ID
7 IF
12 3L
12 3H
1 4A
1 4E
12 EN1
11 EN1
14 EN1
13 EN1
12 SN1
13 SN1
16 EN1
15 EN1
Y
B
R
W
V
P
LG
G
13 A CLG6
14 A CG6B
15 A CLG7
16 A CG7B
31 A CLG8
32 A CG8B
19 A ACC
18 A IG
20 B SH-
7 A TSW5
E58(A), E59(B)
Certification ECU
E58(A), E59(B)
Certification ECU
ASEL
RC0
RDA
RSSI
TSW1
SEL1
SEN1
CLG1
CG1B
CANL
CANH
37 A
29 A
38 A
39 A
3 A
5 A
22 A
33 A
34 A
28 A
27 A
11 EO1
14 EO1
13 EO1
12 EO1
4
2
3
5
ASEL
+5
DATA
RSSI
ANT
GND
O18
Door Control
Receiver
7
6
1
ANT
O19
Electrical
Key Antenna
6
O21
Junction
Connector
GR
15 IE1
7 IX1
13 IE1
14 IE1
17 IE1
16 IE1
12 IE1
6 IX1
4 IX1
3 IX1
2 IX1
1 IX1
8 IX1
17 IE2
R
G
L
W
W-B
O
BR
3 TRG+
6 SGT2
5 ANT1
2 ANT2
1 TRG-
9 TRG-
8 ANT2
3 ANT1
2 SGT
4 SEL
6 SENS
10 CLG
5 CLGB
1 +B
7 GND
X1
Door Outside Handle
(Front LH)
X2
Electrical Key Oscillator
(Front Door LH)
13
2
E49
Junction
Connector
9
EO1
O1
E2

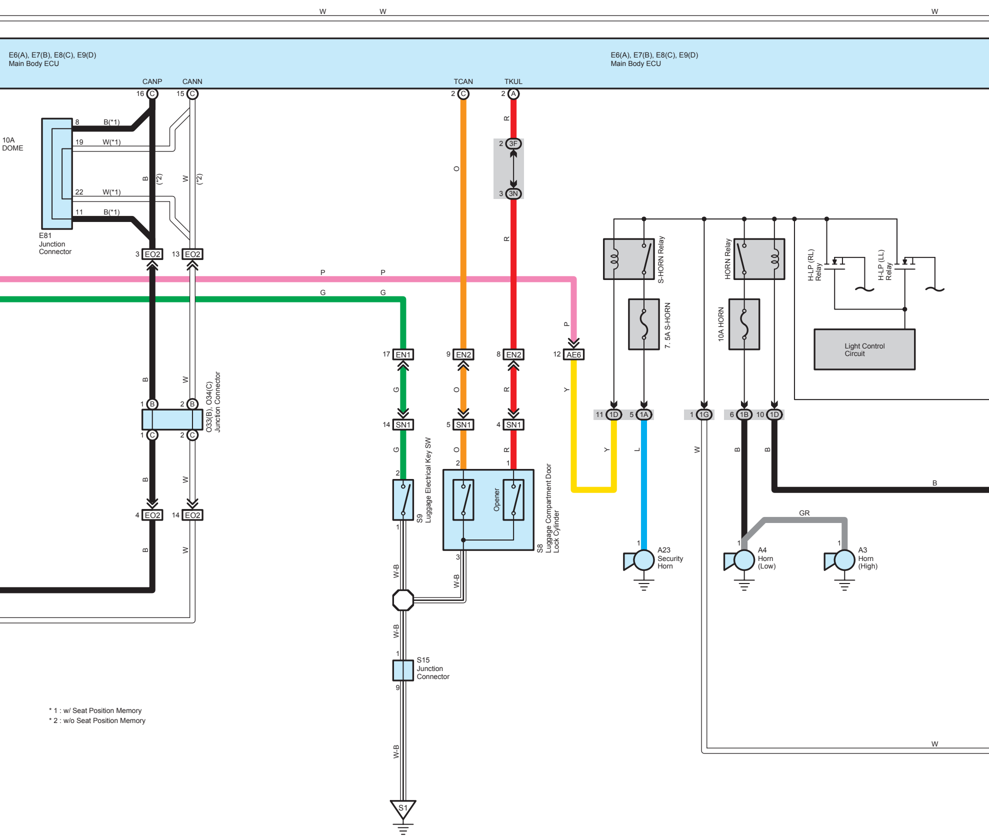
W
W
W
E6(A), E7(B), E8(C), E9(D)
Main Body ECU
E6(A), E7(B), E8(C), E9(D)
Main Body ECU
CANP
CANN
TCAN
TKUL
16 C
15 C
2 C
2 A
10A
DOME
8 B(*1)
19 W(*1)
22 W(*1)
11 B(*1)
B (*2)
W (*2)
E81
Junction
Connector
3 EO2
13 EO2
O
R
2 3F
3 3N
P
P
G
G
S-HORN Relay
HORN Relay
H-LP (RL) Relay
H-LP (LL) Relay
7. 5A S-HORN
10A HORN
Light Control
Circuit
17 EN1
9 EN2
8 EN2
12 AE6
1 B
2 B
1 C
2 C
O33(B), O34(C)
Junction Connector
14 SN1
5 SN1
4 SN1
11 1D
5 1A
1 1G
6 1B
10 1D
Y
L
W
B
B
B
GR
S9
Luggage Electrical Key SW
Opener
S8
Luggage Compartment Door
Lock Cylinder
4 EO2
14 EO2
W-B
A23
Security
Horn
A4
Horn
(Low)
A3
Horn
(High)
S15
Junction
Connector
S1

* 1 : w/ Seat Position Memory
* 2 : w/o Seat Position Memory

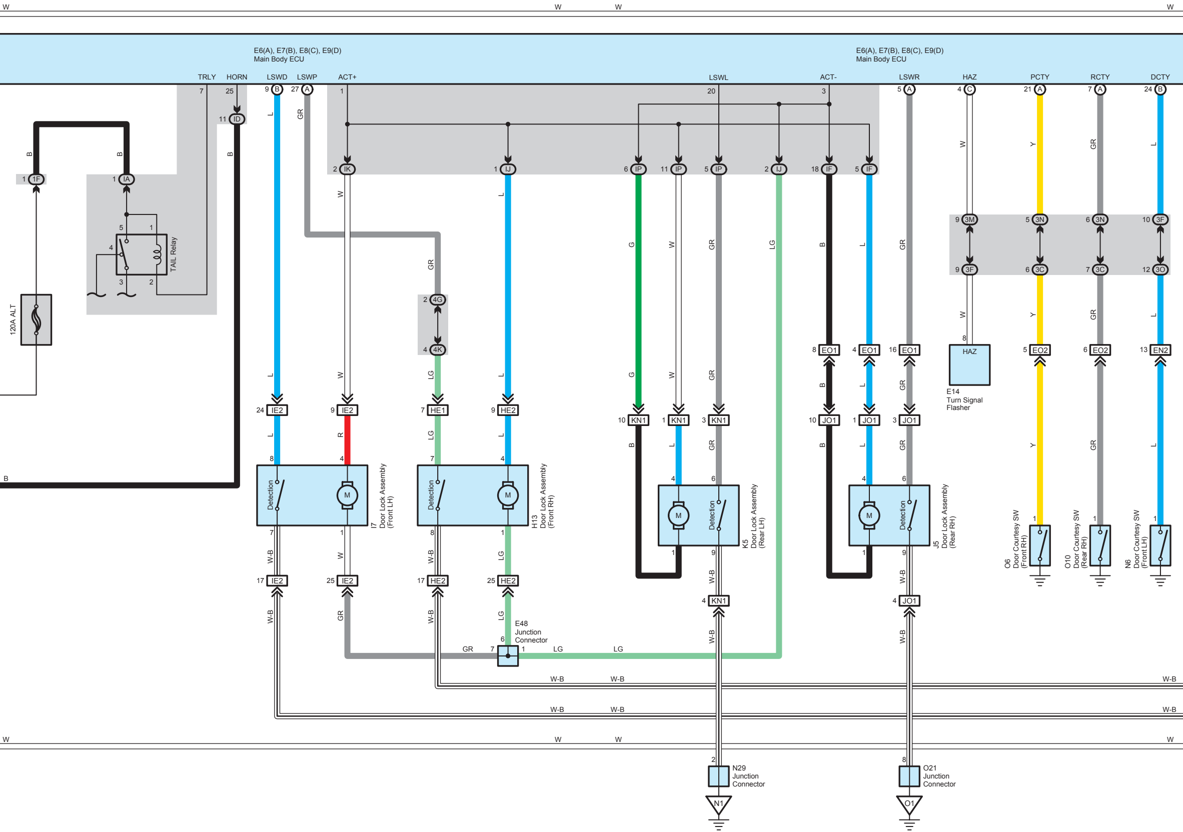
E6(A), E7(B), E8(C), E9(D)
Main Body ECU
E6(A), E7(B), E8(C), E9(D)
Main Body ECU
TRLY
HORN
LSWD
LSWP
ACT+
LSWL
ACT-
LSWR
HAZ
PCTY
RCTY
DCTY
120A ALT
TAIL Relay
I7
Door Lock Assembly
(Front LH)
H13
Door Lock Assembly
(Front RH)
K5
Door Lock Assembly
(Rear LH)
J5
Door Lock Assembly
(Rear RH)
Detection
M
E14
Turn Signal
Flasher
HAZ
O6
Door Courtesy SW
(Front RH)
O10
Door Courtesy SW
(Rear RH)
N6
Door Courtesy SW
(Front LH)
E48
Junction
Connector
N29
Junction
Connector
O21
Junction
Connector
N1
O1
1F
IA
ID
IK
IJ
IP
IF
4G
4K
3M
3N
3F
3C
3O
IE2
HE1
HE2
KN1
JO1
EO1
EO2
EN2
W
B
L
GR
G
LG
R
Y
W-B

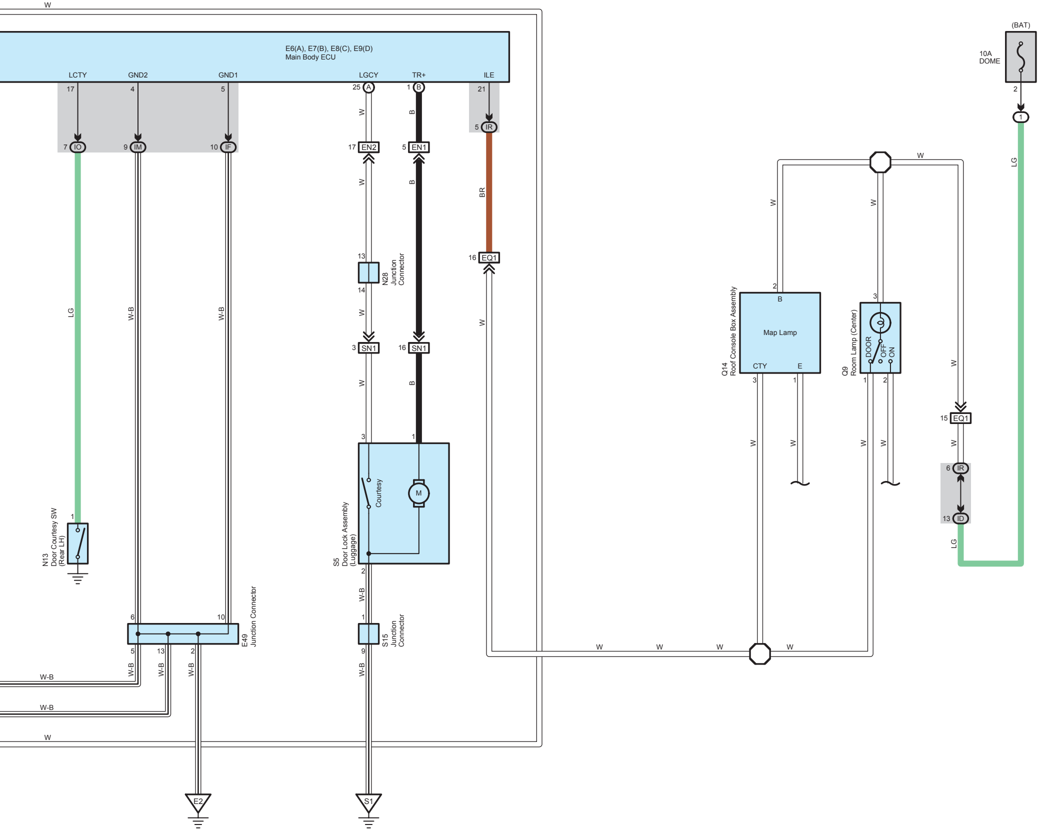
W
E6(A), E7(B), E8(C), E9(D)
Main Body ECU
LCTY
GND2
GND1
LGCY
TR+
ILE
17
4
5
25 A
1 B
21
(BAT)
10A
DOME
2
1
5 IR
7 IO
9 IM
10 IF
17 EN2
5 EN1
W
B
BR
LG
W
13
N28
Junction
Connector
14
W
16 EQ1
3 SN1
16 SN1
W
B
LG
W-B
W-B
W
W
W
W
2
B
Map Lamp
Q14
Roof Console Box Assembly
CTY
E
3
1
3
Q9
Room Lamp (Center)
DOOR
OFF
ON
1
2
W
15 EQ1
W
W
W
W
W
6 IR
13 ID
LG
3
1
Courtesy
M
S5
Door Lock Assembly
(Luggage)
2
1
N13
Door Courtesy SW
(Rear LH)
6
10
E49
Junction Connector
5
13
2
W-B
1
S15
Junction
Connector
9
W-B
W-B
W-B
W-B
W-B
W-B
W
W
W
W
W
E2
S1