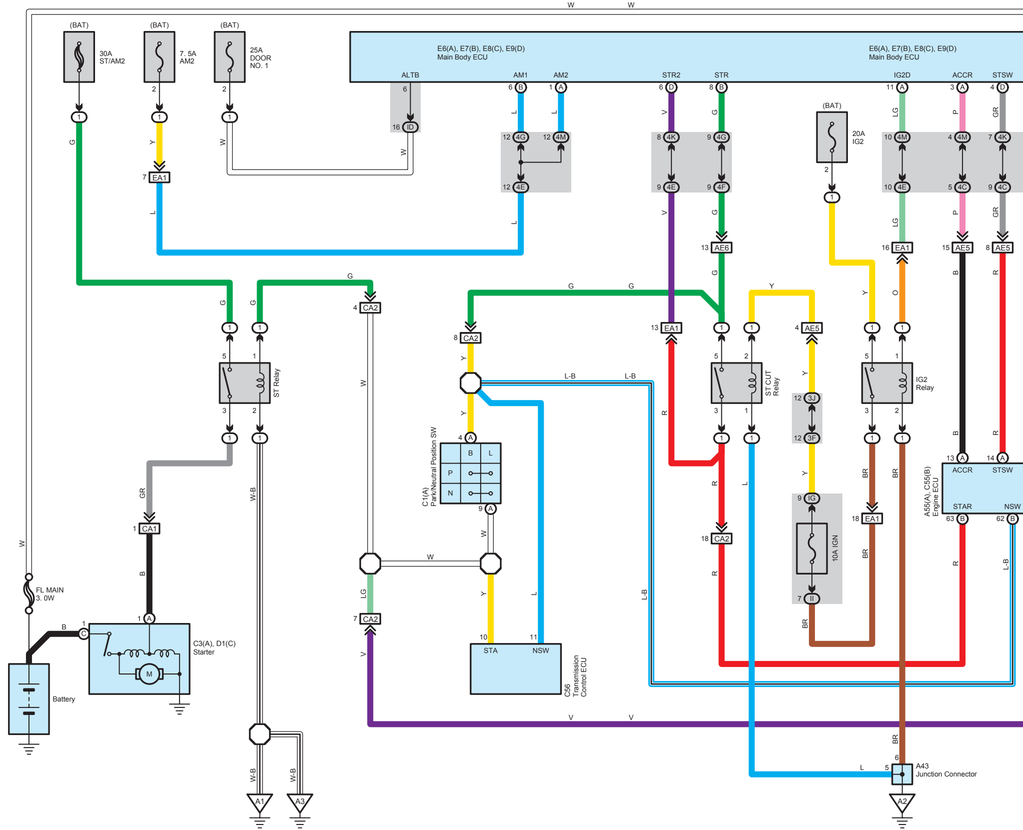
W
(BAT)
30A ST/AM2
(BAT)
7. 5A AM2
(BAT)
25A DOOR NO. 1
E6(A), E7(B), E8(C), E9(D) Main Body ECU
ALTB
AM1
AM2
STR2
STR
E6(A), E7(B), E8(C), E9(D) Main Body ECU
IG2D
ACCR
STSW
(BAT)
20A IG2
EA1
4G
4M
4E
4K
4F
AE6
AE5
4C
ID
CA2
ST Relay
ST CUT Relay
IG2 Relay
C1(A) Park/Neutral Position SW
B
L
P
N
CA1
FL MAIN 3. 0W
Battery
C3(A), D1(C) Starter
M
3J
3F
IG
10A IGN
II
A55(A), C55(B) Engine ECU
ACCR
STSW
STAR
NSW
C56 Transmission Control ECU
STA
NSW
A43 Junction Connector
A1
A3
A2
G
Y
L
W
V
R
GR
B
W-B
LG
P
O
BR
L-B

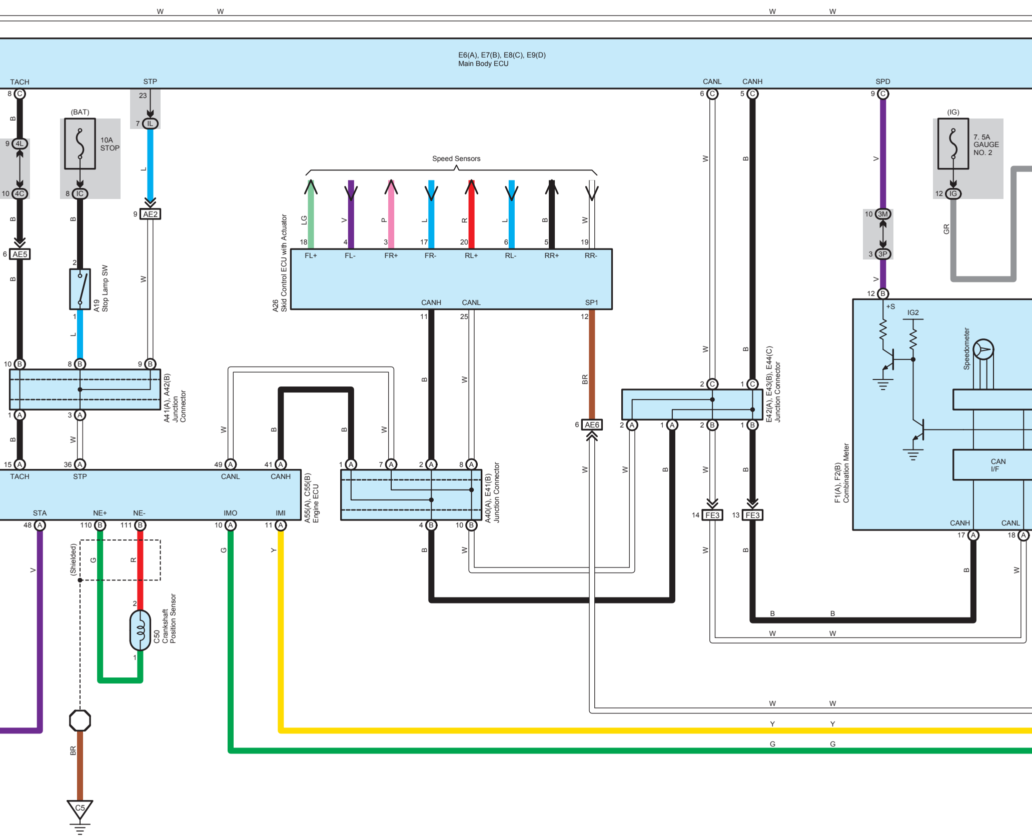
E6(A), E7(B), E8(C), E9(D)
Main Body ECU
TACH
STP
CANL
CANH
SPD
(BAT)
10A
STOP
(IG)
7. 5A
GAUGE
NO. 2
Speed Sensors
LG
V
P
L
R
L
B
W
FL+
FL-
FR+
FR-
RL+
RL-
RR+
RR-
A26
Skid Control ECU with Actuator
CANH
CANL
SP1
4L
4C
IC
IL
AE2
AE5
AE6
3M
3P
IG
A19
Stop Lamp SW
A41(A), A42(B)
Junction
Connector
E42(A), E43(B), E44(C)
Junction Connector
FE3
FE3
+S
IG2
Speedometer
CAN
I/F
F1(A), F2(B)
Combination Meter
CANH
CANL
TACH
STP
CANL
CANH
STA
NE+
NE-
IMO
IMI
A55(A), C55(B)
Engine ECU
A40(A), E41(B)
Junction Connector
(Shielded)
C50
Crankshaft
Position Sensor
C5
B
W
BR
GR
Y
G

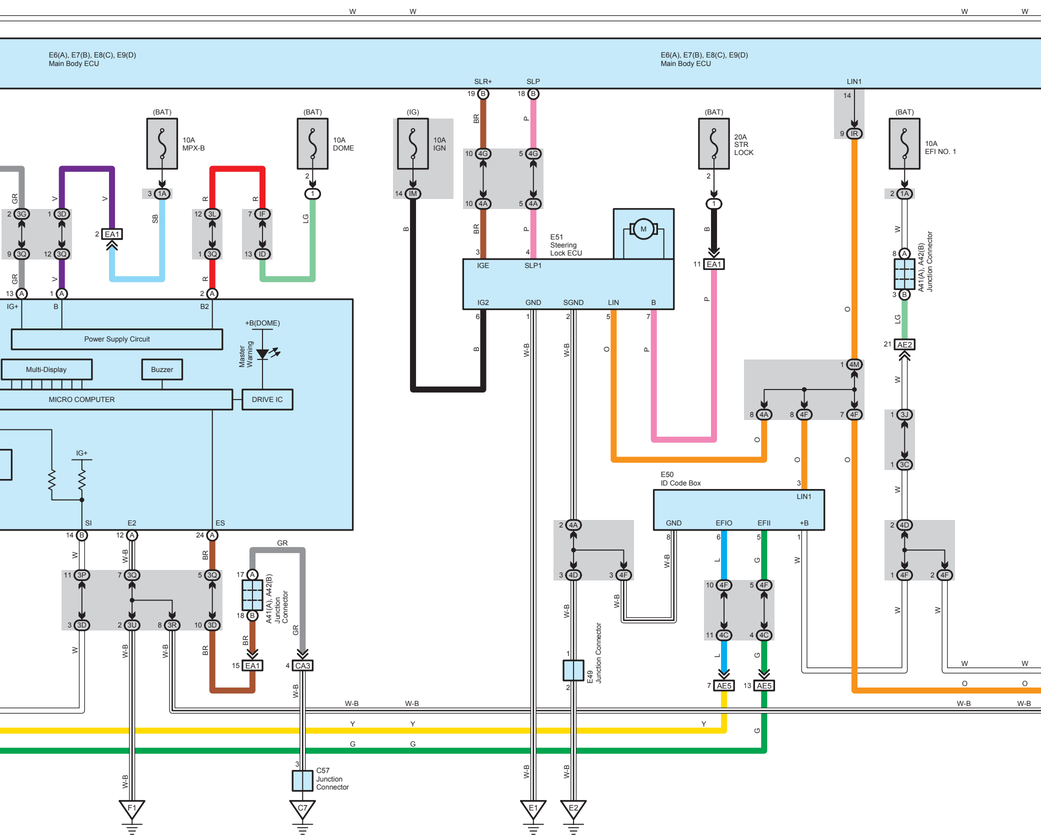
W
W
W
W
E6(A), E7(B), E8(C), E9(D)
Main Body ECU
E6(A), E7(B), E8(C), E9(D)
Main Body ECU
SLR+
SLP
LIN1
(BAT)
10A
MPX-B
(BAT)
10A
DOME
(IG)
10A
IGN
(BAT)
20A
STR
LOCK
(BAT)
10A
EFI NO. 1
GR
V
V
SB
R
R
LG
B
BR
P
3G
3D
EA1
1A
3L
IF
1
IM
4G
4A
IR
3Q
ID
E51
Steering
Lock ECU
M
IGE
SLP1
IG2
GND
SGND
LIN
B
EA1
A41(A), A42(B)
Junction Connector
AE2
IG+
B
B2
Power Supply Circuit
+B(DOME)
Master
Warning
Multi-Display
Buzzer
MICRO COMPUTER
DRIVE IC
IG+
SI
E2
ES
W-B
O
P
4M
4A
4F
3J
3C
E50
ID Code Box
LIN1
GND
EFIO
EFII
+B
4A
4D
4F
4D
4F
4C
L
G
AE5
AE5
3P
3Q
3D
3U
3R
A41(A), A42(B)
Junction
Connector
GR
EA1
CA3
E49
Junction Connector
Y
G
C57
Junction
Connector
F1
C7
E1
E2

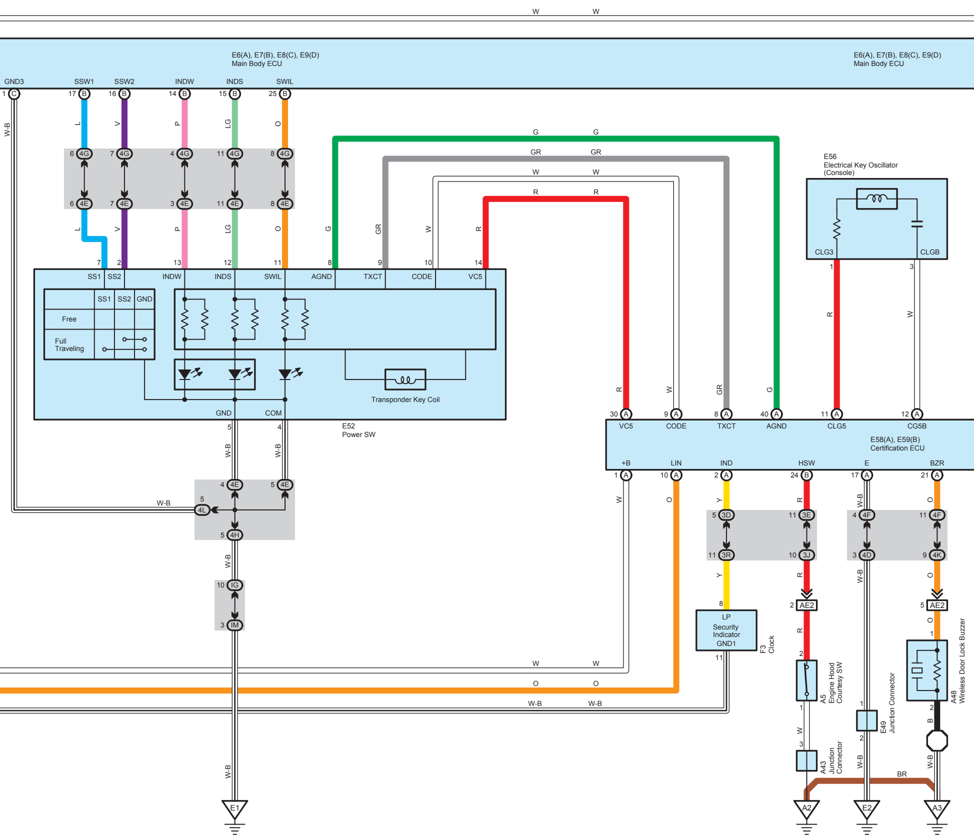
E6(A), E7(B), E8(C), E9(D)
Main Body ECU
E6(A), E7(B), E8(C), E9(D)
Main Body ECU
GND3
SSW1
SSW2
INDW
INDS
SWIL
E56
Electrical Key Oscillator
(Console)
CLG3
CLGB
SS1
SS2
INDW
INDS
SWIL
AGND
TXCT
CODE
VC5
SS1
SS2
GND
Free
Full
Traveling
Transponder Key Coil
GND
COM
E52
Power SW
VC5
CODE
TXCT
AGND
CLG5
CG5B
E58(A), E59(B)
Certification ECU
+B
LIN
IND
HSW
E
BZR
LP
Security
Indicator
GND1
F3
Clock
A5
Engine Hood
Courtesy SW
E49
Junction Connector
A48
Wireless Door Lock Buzzer
A43
Junction
Connector
AE2
AE2
BR
E1
A2
E2
A3
W
G
GR
R
L
V
P
LG
O
Y
B
W-B

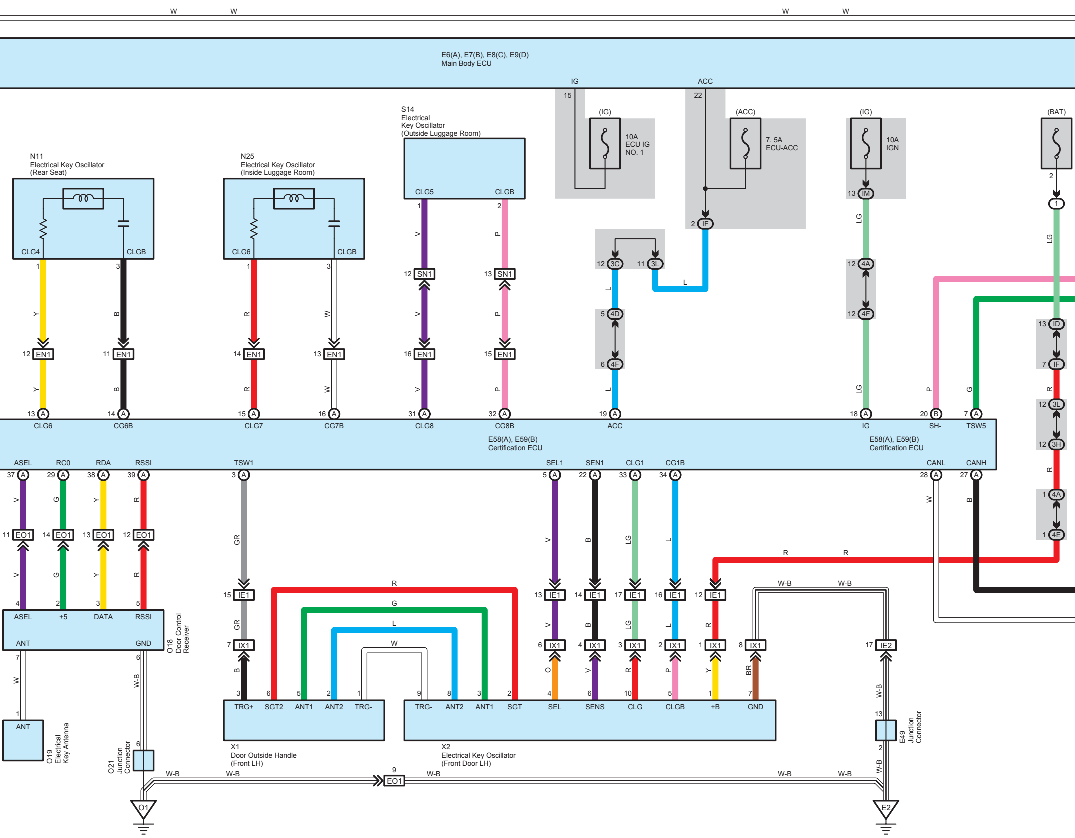
W
W
W
W
E6(A), E7(B), E8(C), E9(D)
Main Body ECU
IG
ACC
15
22
(IG)
10A
ECU IG
NO. 1
(ACC)
7. 5A
ECU-ACC
(IG)
10A
IGN
(BAT)
2
1
13 IM
2 IF
12 3C
11 3L
L
5 4D
6 4F
12 4A
12 4F
13 ID
7 IF
12 3L
12 3H
1 4A
1 4E
LG
R
S14
Electrical
Key Oscillator
(Outside Luggage Room)
CLG5
CLGB
N11
Electrical Key Oscillator
(Rear Seat)
CLG4
CLGB
N25
Electrical Key Oscillator
(Inside Luggage Room)
CLG6
CLGB
12 SN1
13 SN1
12 EN1
11 EN1
14 EN1
13 EN1
16 EN1
15 EN1
Y
B
R
W
V
P
13 A CLG6
14 A CG6B
15 A CLG7
16 A CG7B
31 A CLG8
32 A CG8B
19 A ACC
18 A IG
20 B SH-
7 A TSW5
E58(A), E59(B)
Certification ECU
E58(A), E59(B)
Certification ECU
ASEL
RCO
RDA
RSSI
TSW1
SEL1
SEN1
CLG1
CG1B
CANL
CANH
37 A
29 A
38 A
39 A
3 A
5 A
22 A
33 A
34 A
28 A
27 A
11 EO1
14 EO1
13 EO1
12 EO1
ASEL
+5
DATA
RSSI
ANT
GND
O18
Door Control
Receiver
ANT
O19
Electrical
Key Antenna
O21
Junction
Connector
15 IE1
7 IX1
GR
R
G
L
W
13 IE1
14 IE1
17 IE1
16 IE1
12 IE1
6 IX1
4 IX1
3 IX1
2 IX1
1 IX1
8 IX1
17 IE2
O
BR
W-B
TRG+
SGT2
ANT1
ANT2
TRG-
X1
Door Outside Handle
(Front LH)
TRG-
ANT2
ANT1
SGT
SEL
SENS
CLG
CLGB
+B
GND
X2
Electrical Key Oscillator
(Front Door LH)
E49
Junction
Connector
9 EO1
O1
E2

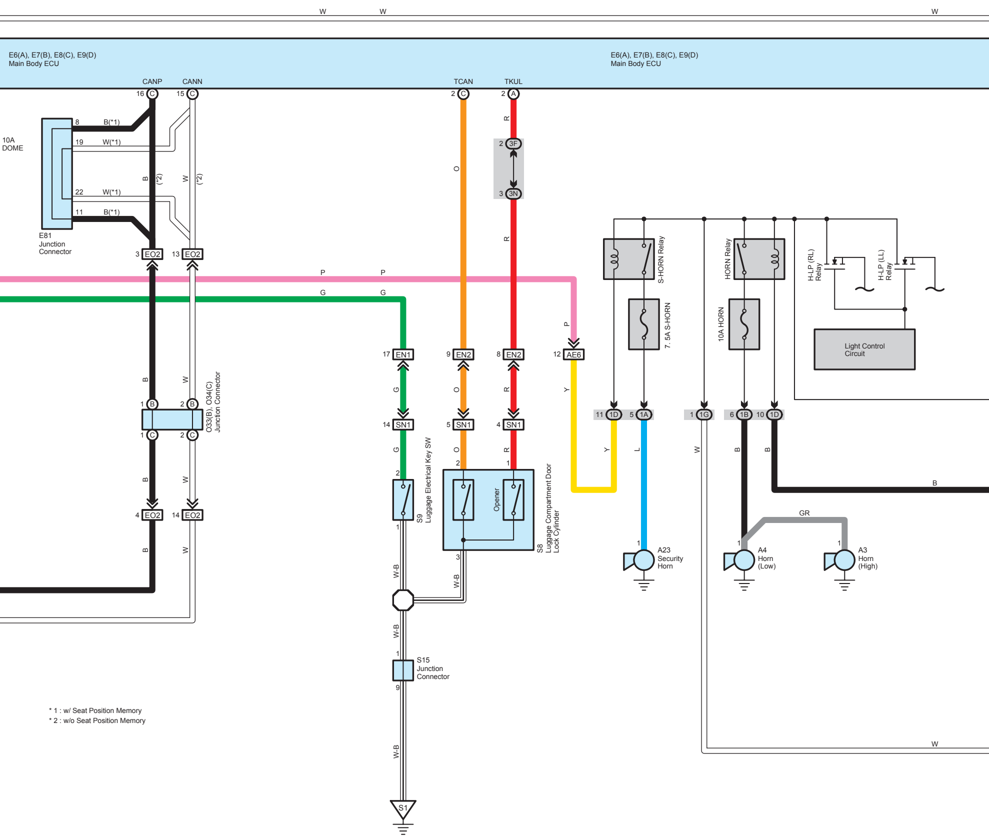
W
W
W
E6(A), E7(B), E8(C), E9(D)
Main Body ECU
E6(A), E7(B), E8(C), E9(D)
Main Body ECU
CANP
CANN
TCAN
TKUL
16 C
15 C
2 C
2 A
10A DOME
8 B(*1)
19 W(*1)
22 W(*1)
11 B(*1)
B (*2)
W (*2)
E81 Junction Connector
3 EO2
13 EO2
O
R
2 3F
3 3N
R
P
P
P
G
G
17 EN1
9 EN2
8 EN2
12 AE6
B
W
1 B
2 B
1 C
2 C
O33(B), O34(C) Junction Connector
G
O
R
Y
14 SN1
5 SN1
4 SN1
G
O
R
2
2
1
S9 Luggage Electrical Key SW
Opener
S8 Luggage Compartment Door Lock Cylinder
1
3
W-B
W-B
W-B
1
S15 Junction Connector
9
W-B
S1
B
W
4 EO2
14 EO2
B
W
S-HORN Relay
HORN Relay
H-LP (RL) Relay
H-LP (LL) Relay
7. 5A S-HORN
10A HORN
Light Control Circuit
11 1D
5 1A
1 1G
6 1B
10 1D
Y
L
W
B
B
B
GR
1
A23 Security Horn
1
A4 Horn (Low)
1
A3 Horn (High)
W

* 1 : w/ Seat Position Memory
* 2 : w/o Seat Position Memory

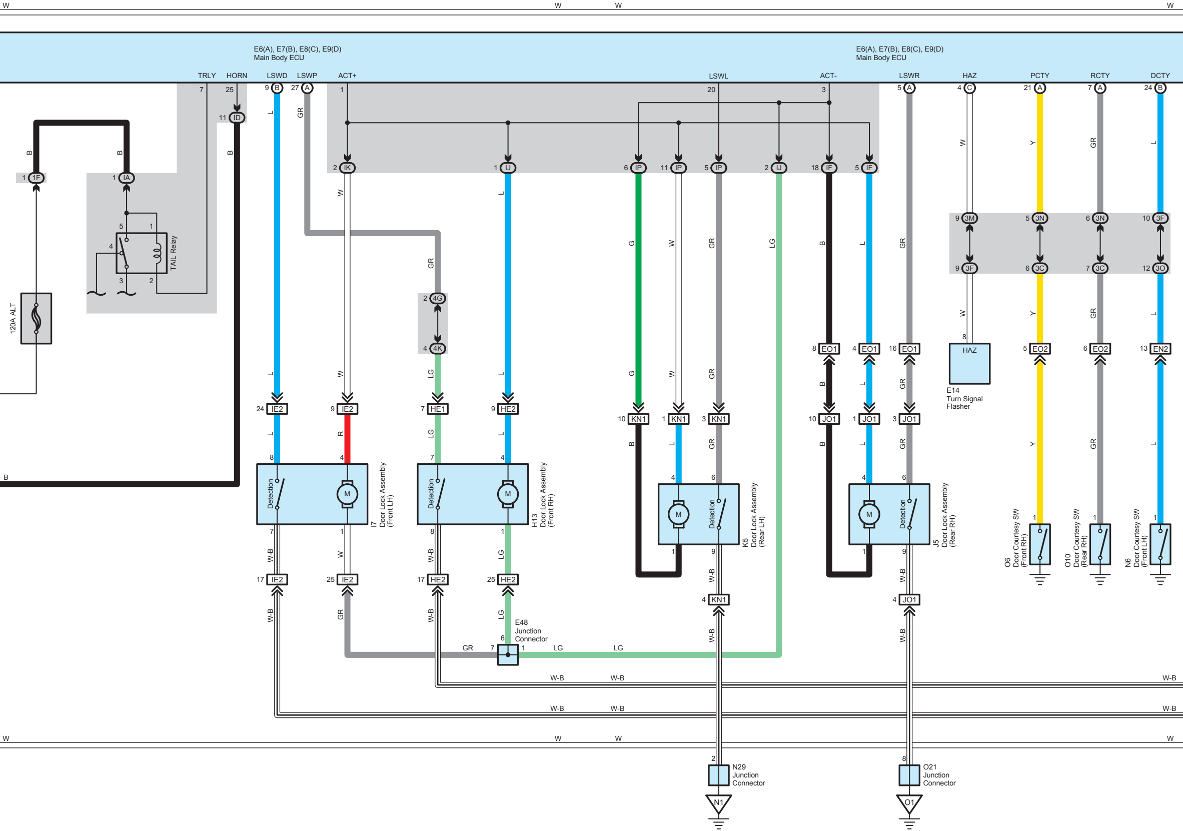
W
W
W
W
E6(A), E7(B), E8(C), E9(D)
Main Body ECU
E6(A), E7(B), E8(C), E9(D)
Main Body ECU
TRLY
HORN
LSWD
LSWP
ACT+
LSWL
ACT-
LSWR
HAZ
PCTY
RCTY
DCTY
7
25
9 B
27 A
1
20
3
5 A
4 C
21 A
7 A
24 B
11 ID
B
B
B
1 1F
1 IA
5
1
4
3
2
TAIL Relay
120A ALT
B
L
GR
2 IK
1 IJ
6 IP
11 IP
5 IP
2 IJ
18 IF
5 IF
W
L
G
W
GR
LG
B
L
GR
W
Y
GR
L
9 3M
5 3N
6 3N
10 3F
9 3F
6 3C
7 3C
12 3O
GR
2 4G
4 4K
LG
8 EO1
4 EO1
16 EO1
8
HAZ
E14
Turn Signal
Flasher
5 EO2
6 EO2
13 EN2
24 IE2
9 IE2
7 HE1
9 HE2
10 KN1
1 KN1
3 KN1
10 JO1
1 JO1
3 JO1
R
8
4
7
4
M
Detection
I7
Door Lock Assembly
(Front LH)
H13
Door Lock Assembly
(Front RH)
4
6
1
9
K5
Door Lock Assembly
(Rear LH)
J5
Door Lock Assembly
(Rear RH)
O6
Door Courtesy SW
(Front RH)
O10
Door Courtesy SW
(Rear RH)
N6
Door Courtesy SW
(Front LH)
7
1
8
1
W-B
17 IE2
25 IE2
17 HE2
25 HE2
4 KN1
4 JO1
E48
Junction
Connector
6
7
1
GR
LG
LG
W-B
W-B
W-B
W-B
W-B
W-B
2
N29
Junction
Connector
N1
8
O21
Junction
Connector
O1

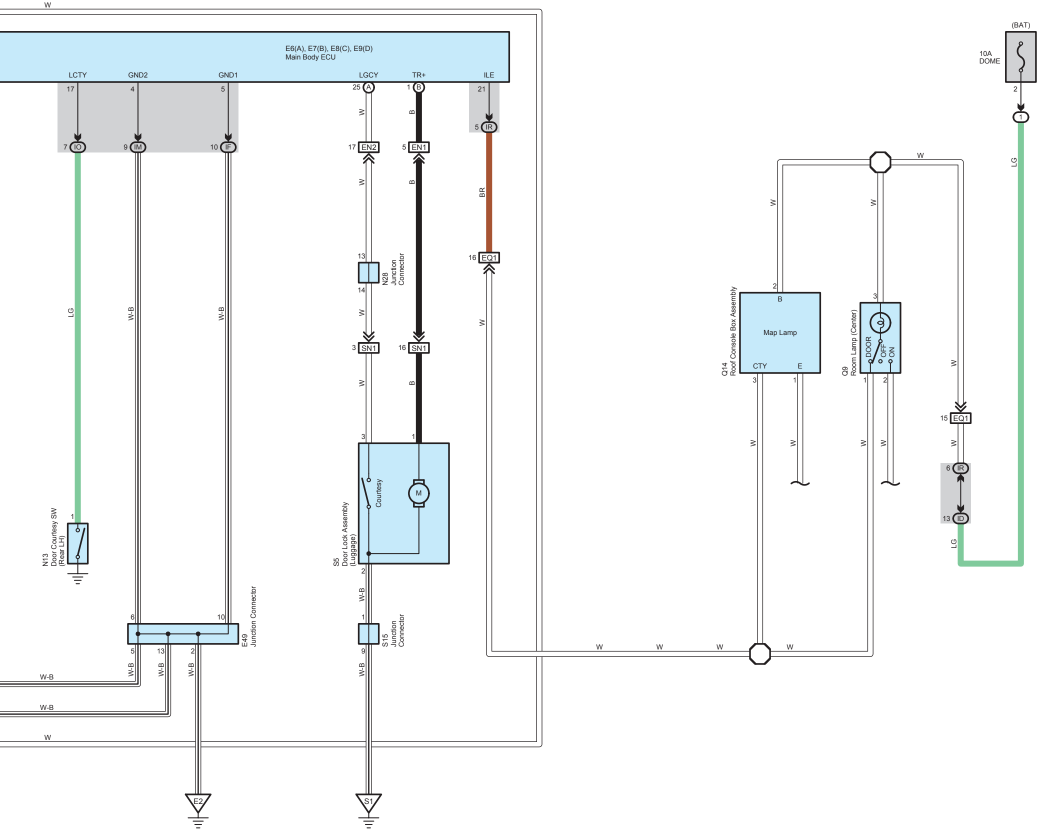
W
E6(A), E7(B), E8(C), E9(D)
Main Body ECU
LCTY
GND2
GND1
LGCY
TR+
ILE
17
4
5
25 A
1 B
21
W
B
5 IR
7 IO
9 IM
10 IF
17 EN2
5 EN1
W
B
BR
13
N28
Junction
Connector
14
16 EQ1
LG
W-B
W-B
W
W
3 SN1
16 SN1
W
B
3
1
Courtesy
M
S5
Door Lock Assembly
(Luggage)
2
W-B
1
S15
Junction
Connector
9
W-B
S1
1
N13
Door Courtesy SW
(Rear LH)
6
10
E49
Junction Connector
5
13
2
W-B
W-B
W-B
W-B
W-B
W
E2
W
W
W
W
(BAT)
10A
DOME
2
1
LG
W
W
W
2
B
Map Lamp
Q14
Roof Console Box Assembly
CTY
E
3
1
3
DOOR
OFF
ON
Q9
Room Lamp (Center)
1
2
W
W
W
W
W
15 EQ1
W
6 IR
13 ID
LG