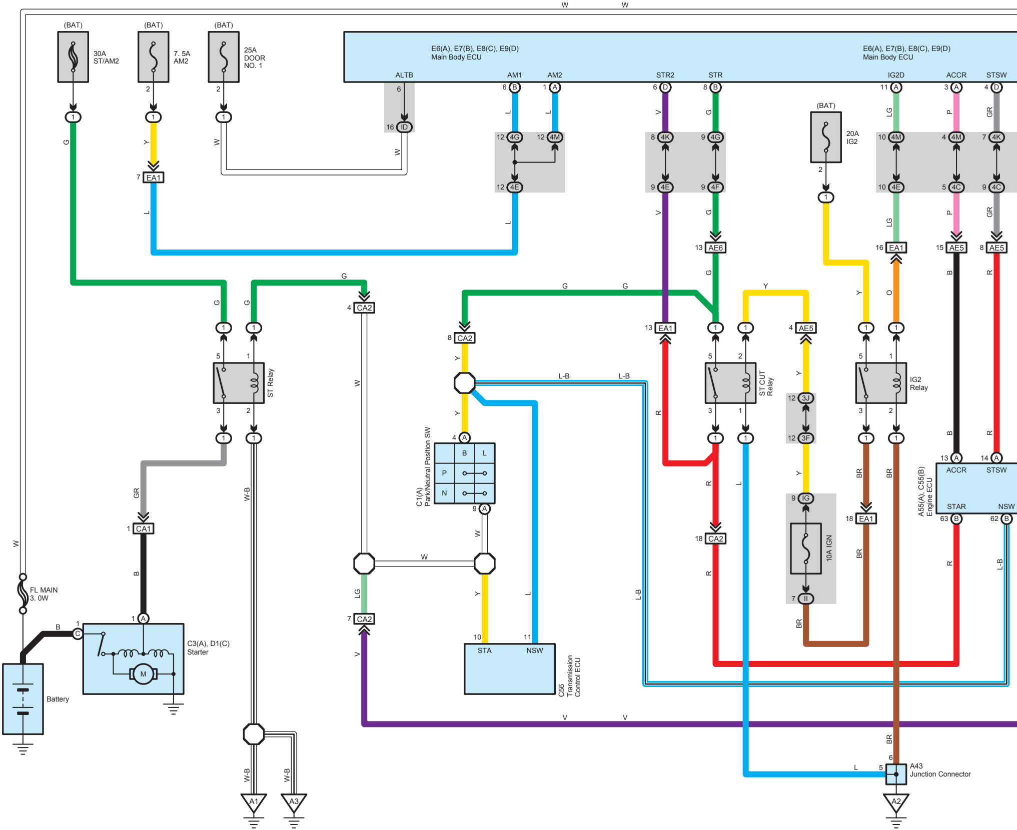
(BAT)
30A ST/AM2
(BAT)
7.5A AM2
(BAT)
25A DOOR NO. 1
E6(A), E7(B), E8(C), E9(D)
Main Body ECU
ALTB
AM1
AM2
STR2
STR
E6(A), E7(B), E8(C), E9(D)
Main Body ECU
IG2D
ACCR
STSW
(BAT)
20A IG2
W
G
Y
L
EA1
4G
4M
4E
ID
4K
4F
AE6
AE5
CA2
CA1
ST Relay
ST CUT Relay
IG2 Relay
C1(A)
Park/Neutral Position SW
B
L
P
N
L-B
V
R
BR
LG
GR
O
P
3J
3F
IG
10A IGN
II
A55(A), C55(B)
Engine ECU
ACCR
STSW
STAR
NSW
W-B
FL MAIN 3.0W
Battery
C3(A), D1(C)
Starter
M
STA
NSW
C56
Transmission Control ECU
A43
Junction Connector
A1
A3
A2

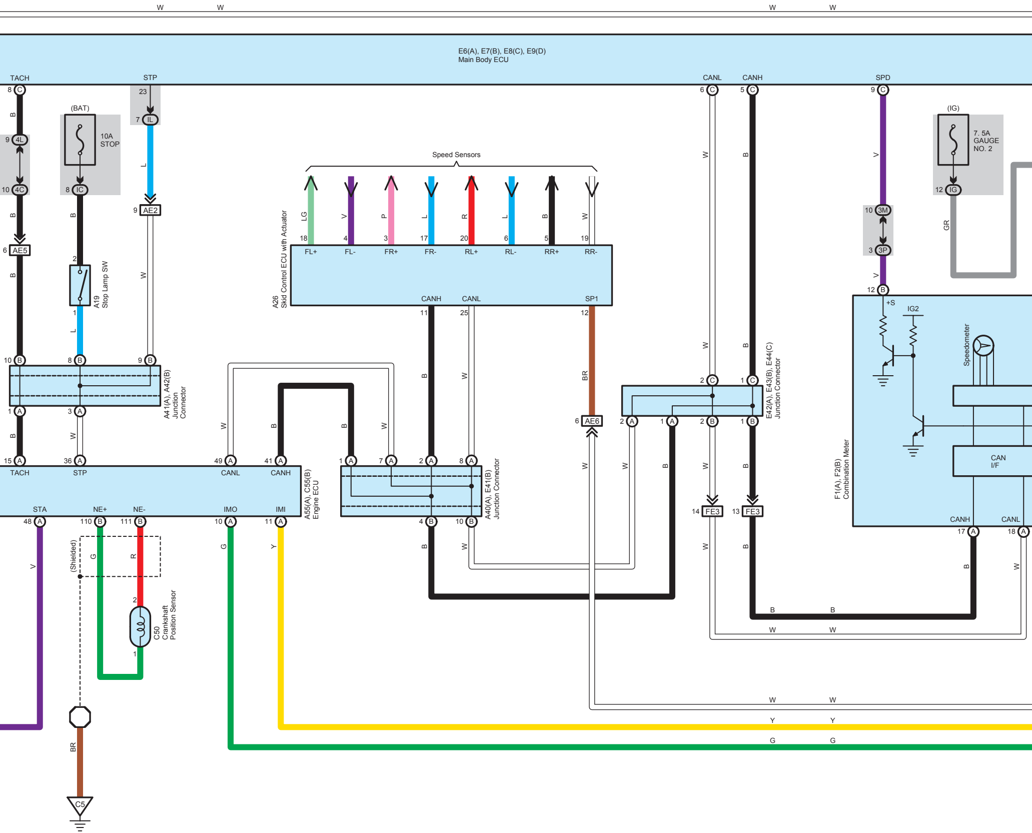
E6(A), E7(B), E8(C), E9(D)
Main Body ECU
TACH
STP
CANL
CANH
SPD
(BAT)
10A
STOP
(IG)
7. 5A
GAUGE
NO. 2
4L
4C
IC
IL
AE2
AE5
3M
3P
IG
Speed Sensors
LG
V
P
L
R
L
B
W
FL+
FL-
FR+
FR-
RL+
RL-
RR+
RR-
A26
Skid Control ECU with Actuator
CANH
CANL
SP1
A19
Stop Lamp SW
A41(A), A42(B)
Junction Connector
AE6
E42(A), E43(B), E44(C)
Junction Connector
+S
IG2
Speedometer
CAN
I/F
F1(A), F2(B)
Combination Meter
CANH
CANL
TACH
STP
CANL
CANH
STA
NE+
NE-
IMO
IMI
A55(A), C55(B)
Engine ECU
A40(A), E41(B)
Junction Connector
(Shielded)
C50
Crankshaft
Position Sensor
FE3
FE3
GR
BR
C5
W
B
V
Y
G

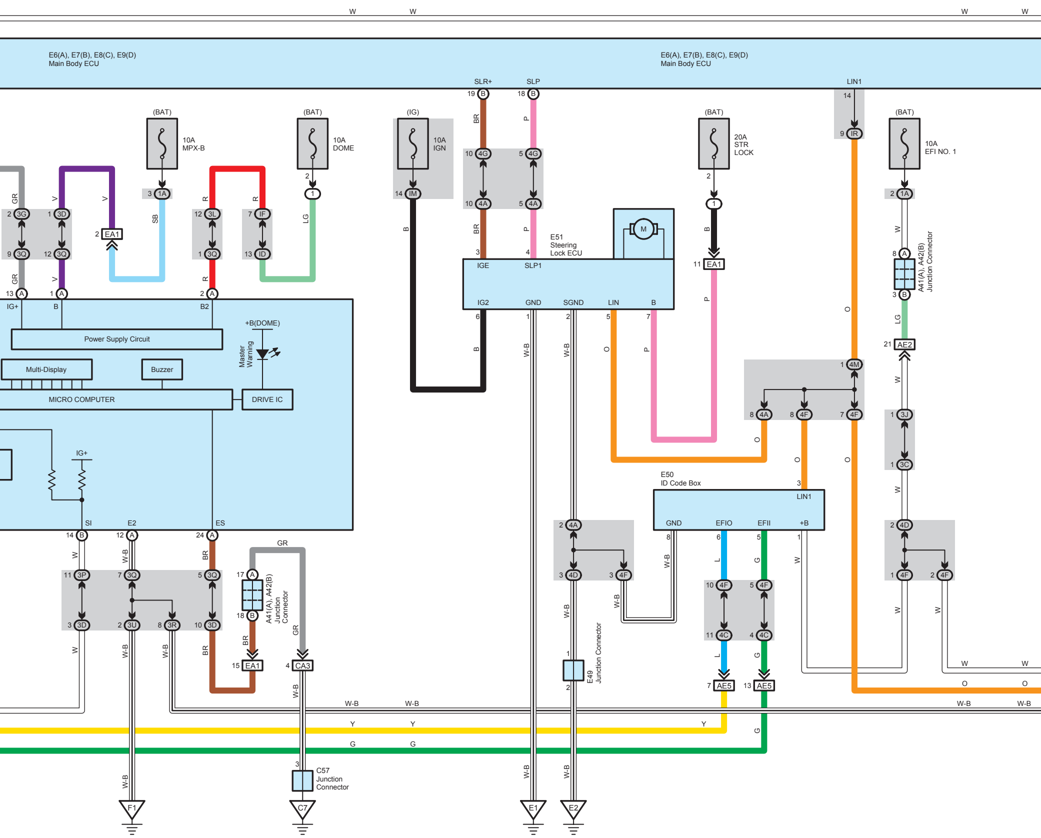
W
W
W
W
E6(A), E7(B), E8(C), E9(D)
Main Body ECU
E6(A), E7(B), E8(C), E9(D)
Main Body ECU
SLR+
SLP
LIN1
19 B
18 B
14
(BAT)
10A
MPX-B
(BAT)
10A
DOME
(IG)
10A
IGN
(BAT)
20A
STR
LOCK
(BAT)
10A
EFI NO. 1
9 IR
GR
V
V
SB
R
R
LG
B
BR
P
10 4G
5 4G
10 4A
5 4A
3 1A
2
1
14 IM
2 3G
1 3D
2 EA1
12 3L
7 IF
9 3Q
12 3Q
1 3Q
13 ID
2 1A
W
8 A
3 B
A41(A), A42(B)
Junction Connector
LG
21 AE2
E51
Steering
Lock ECU
M
3
4
IGE
SLP1
IG2
GND
SGND
LIN
B
1
11 EA1
P
O
13 A
1 A
2 A
IG+
B
B2
Power Supply Circuit
+B(DOME)
Master
Warning
Multi-Display
Buzzer
MICRO COMPUTER
DRIVE IC
6
1
2
5
7
W-B
W-B
O
P
1 4M
8 4A
8 4F
7 4F
W
1 3J
1 3C
O
O
O
E50
ID Code Box
3
LIN1
GND
EFIO
EFII
+B
8
6
5
1
L
G
W
IG+
SI
E2
ES
14 B
12 A
24 A
W
W-B
BR
GR
11 3P
7 3Q
5 3Q
17 A
A41(A), A42(B)
Junction
Connector
18 B
3 3D
2 3U
8 3R
10 3D
BR
GR
W
W-B
W-B
BR
15 EA1
4 CA3
2 4A
3 4D
3 4F
W-B
W-B
W-B
1
2
E49
Junction Connector
10 4F
5 4F
11 4C
4 4C
L
G
7 AE5
13 AE5
2 4D
1 4F
2 4F
W
W
W
W
O
O
W-B
W-B
W-B
W-B
Y
Y
Y
G
G
G
W-B
3
C57
Junction
Connector
W-B
W-B
W-B
F1
C7
E1
E2

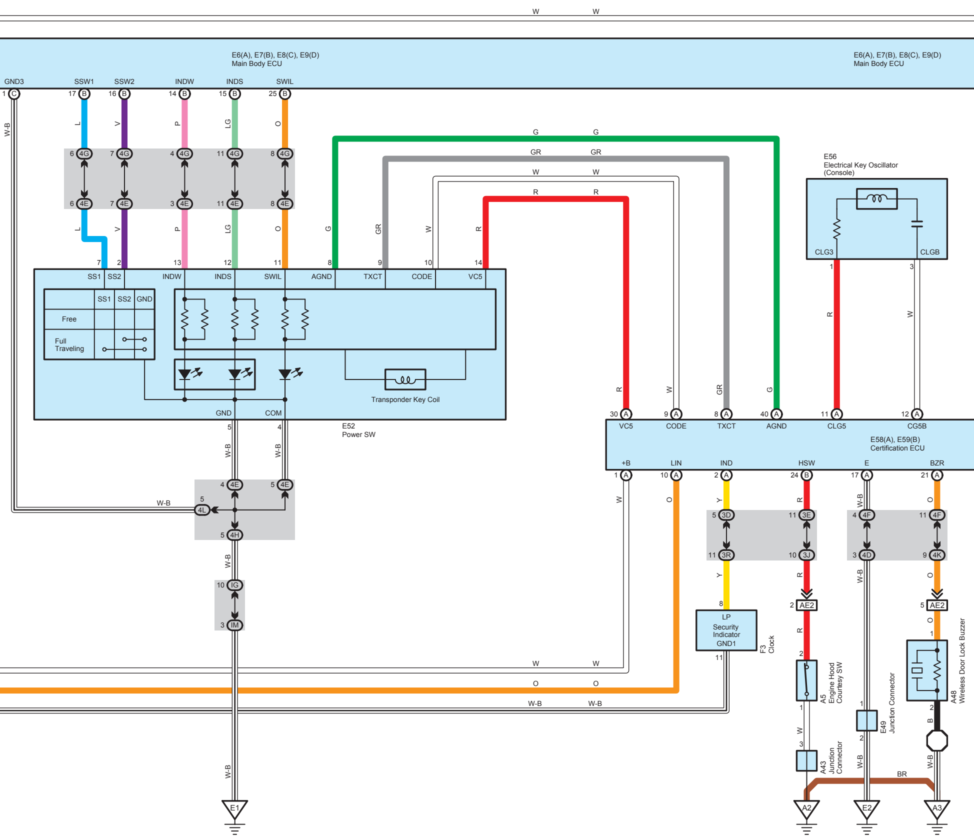
E6(A), E7(B), E8(C), E9(D)
Main Body ECU
E6(A), E7(B), E8(C), E9(D)
Main Body ECU
GND3
SSW1
SSW2
INDW
INDS
SWIL
W-B
L
V
P
LG
O
4G
4E
G
GR
W
R
E56
Electrical Key Oscillator
(Console)
CLG3
CLGB
SS1
SS2
INDW
INDS
SWIL
AGND
TXCT
CODE
VC5
SS1
SS2
GND
Free
Full
Traveling
Transponder Key Coil
GND
COM
E52
Power SW
VC5
CODE
TXCT
AGND
CLG5
CG5B
E58(A), E59(B)
Certification ECU
+B
LIN
IND
HSW
E
BZR
4L
4H
IG
IM
3D
3E
3R
3J
4F
4D
4K
AE2
LP
Security
Indicator
GND1
F3
Clock
A5
Engine Hood
Courtesy SW
A48
Wireless Door Lock Buzzer
E49
Junction Connector
A43
Junction
Connector
Y
BR
B
E1
A2
E2
A3

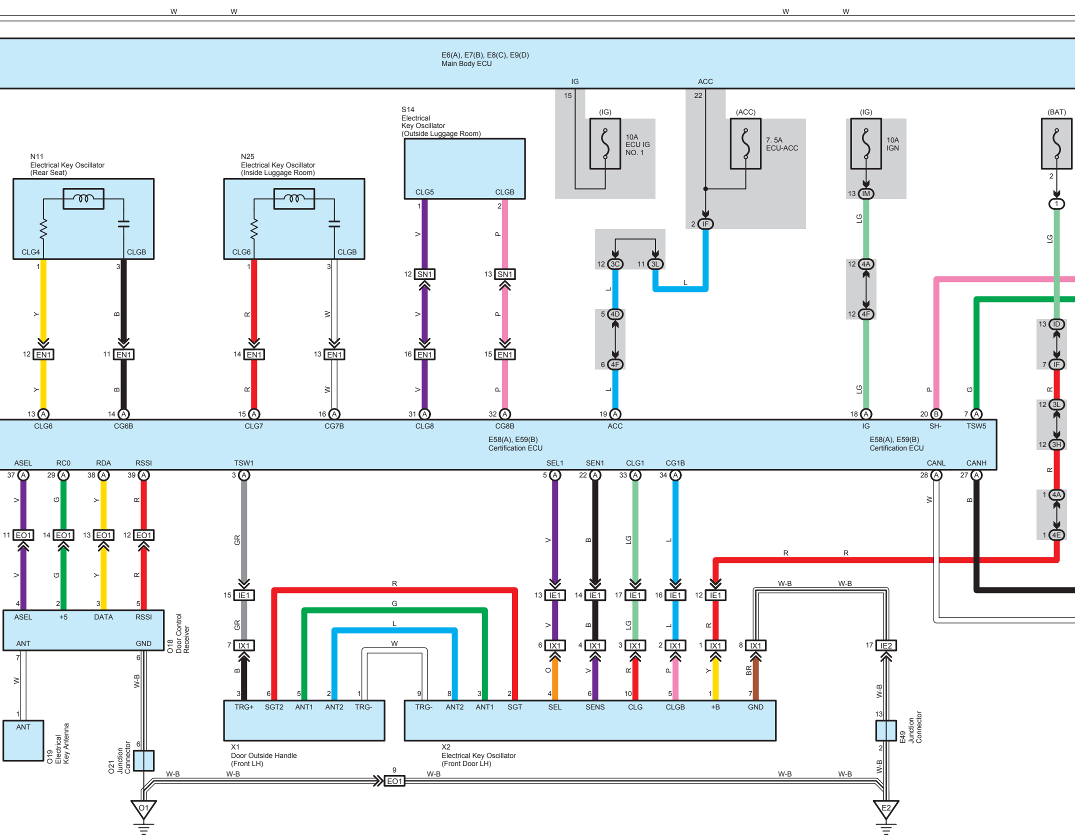
W
W
W
W
E6(A), E7(B), E8(C), E9(D)
Main Body ECU
IG
15
ACC
22
(IG)
10A
ECU IG
NO. 1
(ACC)
7. 5A
ECU-ACC
(IG)
10A
IGN
(BAT)
2
1
13 IM
LG
S14
Electrical
Key Oscillator
(Outside Luggage Room)
CLG5
CLGB
N11
Electrical Key Oscillator
(Rear Seat)
CLG4
CLGB
N25
Electrical Key Oscillator
(Inside Luggage Room)
CLG6
CLGB
2 IF
12 3C
11 3L
L
12 SN1
13 SN1
12 4A
12 4F
5 4D
6 4F
13 ID
7 IF
12 EN1
11 EN1
14 EN1
13 EN1
16 EN1
15 EN1
Y
B
R
W
V
P
LG
G
13 A CLG6
14 A CG6B
15 A CLG7
16 A CG7B
31 A CLG8
32 A CG8B
19 A ACC
18 A IG
20 B SH-
7 A TSW5
12 3L
12 3H
1 4A
1 4E
E58(A), E59(B)
Certification ECU
E58(A), E59(B)
Certification ECU
ASEL
RC0
RDA
RSSI
TSW1
SEL1
SEN1
CLG1
CG1B
CANL
CANH
37 A
29 A
38 A
39 A
3 A
5 A
22 A
33 A
34 A
28 A
27 A
11 EO1
14 EO1
13 EO1
12 EO1
GR
15 IE1
13 IE1
14 IE1
17 IE1
16 IE1
12 IE1
R
R
R
G
L
W
W-B
W-B
ASEL
+5
DATA
RSSI
ANT
GND
O18
Door Control
Receiver
7 IX1
6 IX1
4 IX1
3 IX1
2 IX1
1 IX1
8 IX1
17 IE2
O
BR
TRG+
SGT2
ANT1
ANT2
TRG-
TRG-
ANT2
ANT1
SGT
SEL
SENS
CLG
CLGB
+B
GND
X1
Door Outside Handle
(Front LH)
X2
Electrical Key Oscillator
(Front Door LH)
ANT
O19
Electrical
Key Antenna
O21
Junction
Connector
E49
Junction
Connector
9
EO1
W-B
W-B
W-B
W-B
W-B
O1
E2

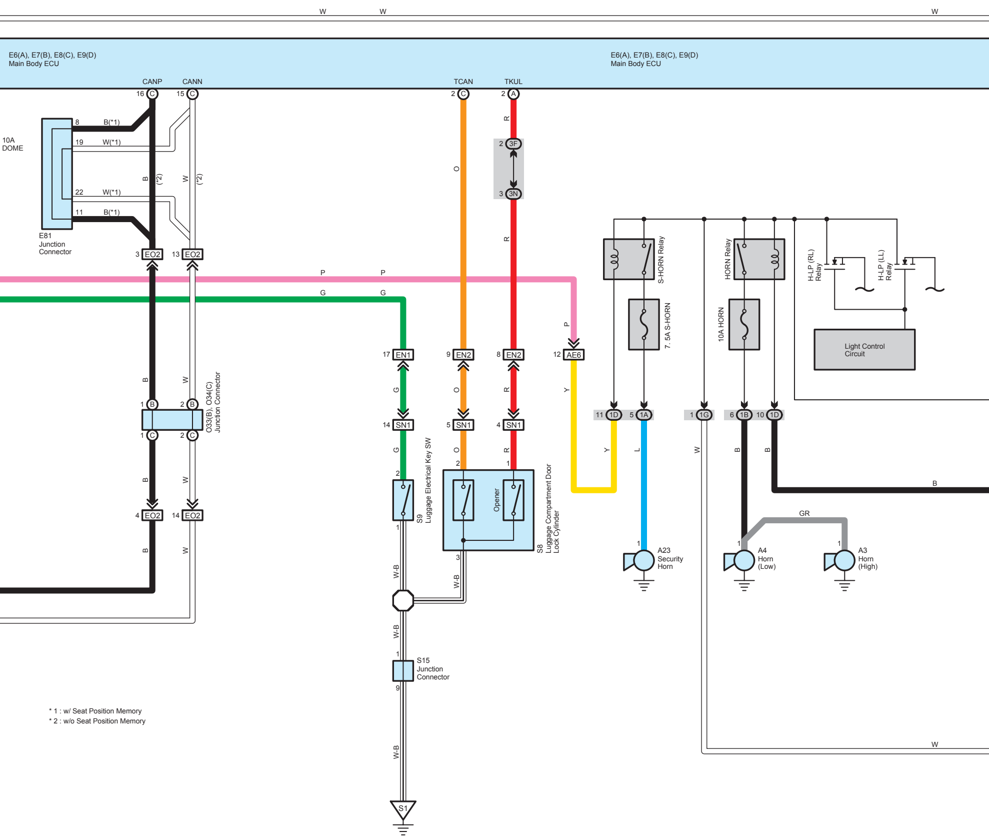
W
W
W
E6(A), E7(B), E8(C), E9(D)
Main Body ECU
E6(A), E7(B), E8(C), E9(D)
Main Body ECU
CANP
CANN
TCAN
TKUL
16 C
15 C
2 C
2 A
10A DOME
8 B(*1)
19 W(*1)
22 W(*1)
11 B(*1)
B (*2)
W (*2)
E81 Junction Connector
3 EO2
13 EO2
R
2 3F
3 3N
O
R
P
P
G
G
P
17 EN1
9 EN2
8 EN2
12 AE6
B
W
1 B
2 B
1 C
2 C
O33(B), O34(C) Junction Connector
G
O
R
Y
14 SN1
5 SN1
4 SN1
G
O
R
2
2
1
S9 Luggage Electrical Key SW
Opener
S8 Luggage Compartment Door Lock Cylinder
1
3
W-B
W-B
W-B
W-B
1
9
S15 Junction Connector
S1
B
W
4 EO2
14 EO2
B
W
S-HORN Relay
7. 5A S-HORN
HORN Relay
10A HORN
H-LP (RL) Relay
H-LP (LL) Relay
Light Control Circuit
11 1D
5 1A
1 1G
6 1B
10 1D
Y
L
W
B
B
B
GR
1
A23 Security Horn
1
A4 Horn (Low)
1
A3 Horn (High)
W

* 1 : w/ Seat Position Memory
* 2 : w/o Seat Position Memory

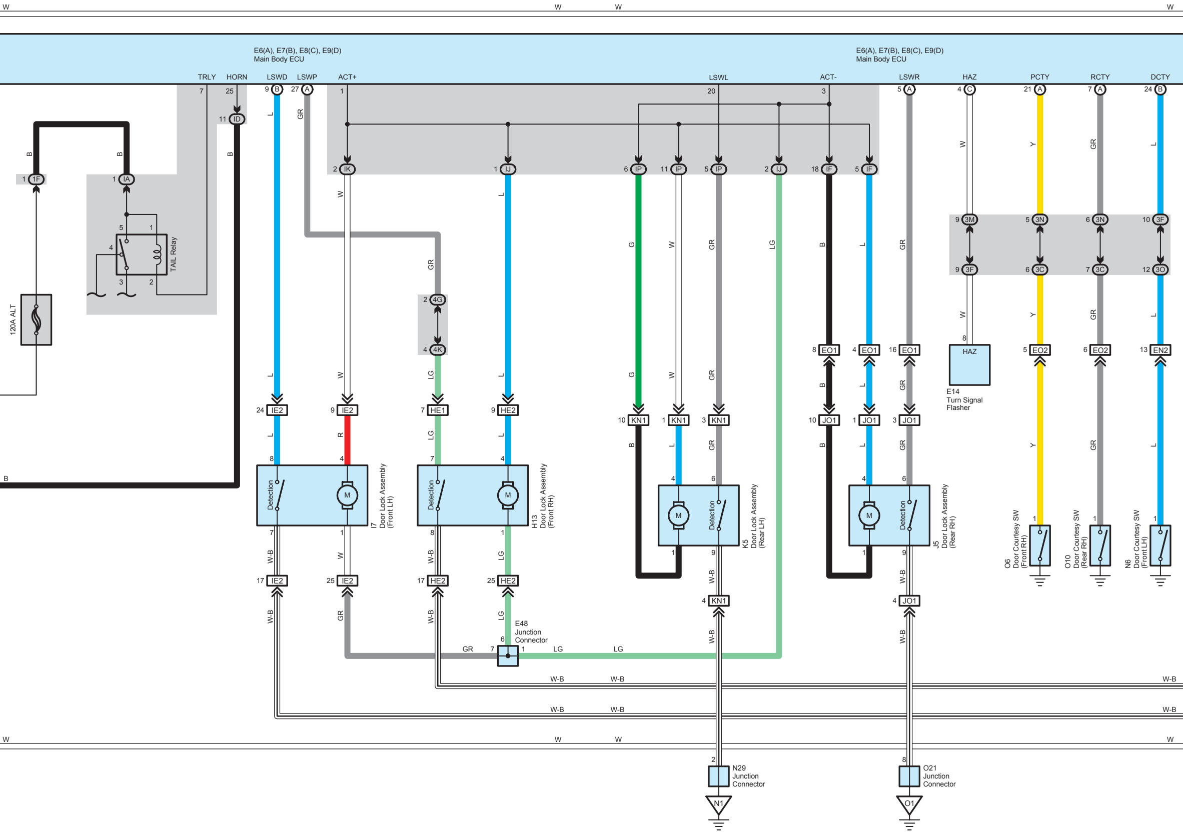
E6(A), E7(B), E8(C), E9(D)
Main Body ECU
TRLY
HORN
LSWD
LSWP
ACT+
LSWL
ACT-
LSWR
HAZ
PCTY
RCTY
DCTY
120A ALT
TAIL Relay
E14
Turn Signal
Flasher
I7
Door Lock Assembly
(Front LH)
H13
Door Lock Assembly
(Front RH)
K5
Door Lock Assembly
(Rear LH)
J5
Door Lock Assembly
(Rear RH)
O6
Door Courtesy SW
(Front RH)
O10
Door Courtesy SW
(Rear RH)
N6
Door Courtesy SW
(Front LH)
E48
Junction
Connector
N29
Junction
Connector
O21
Junction
Connector
Detection
M
N1
O1
IE2
HE1
HE2
KN1
JO1
EO1
EO2
EN2
W-B
GR
LG
W

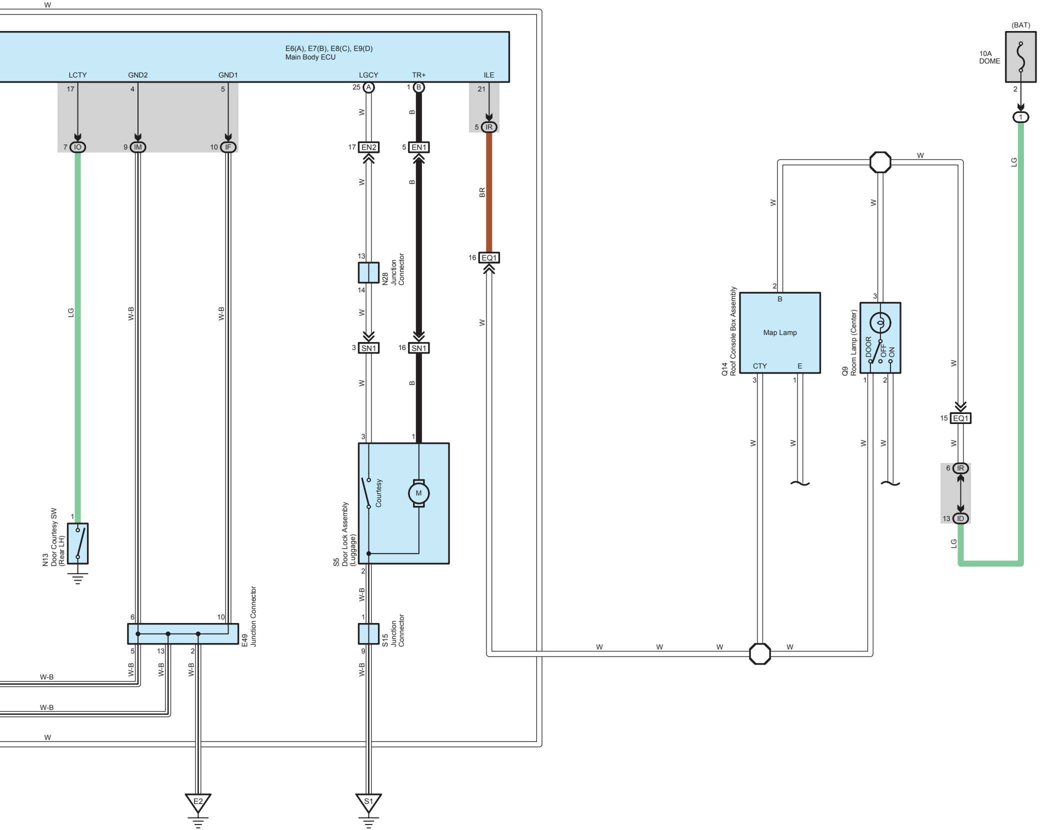
W
E6(A), E7(B), E8(C), E9(D)
Main Body ECU
LCTY
GND2
GND1
LGCY
TR+
ILE
17
4
5
25
A
1
B
21
7
IO
9
IM
10
IF
17
EN2
5
EN1
5
IR
W
B
BR
LG
W-B
W-B
13
14
N28
Junction
Connector
16
EQ1
3
SN1
16
SN1
3
1
Courtesy
M
S5
Door Lock Assembly
(Luggage)
2
W-B
1
9
S15
Junction
Connector
N13
Door Courtesy SW
(Rear LH)
1
6
10
E49
Junction Connector
5
13
2
W-B
W-B
W-B
W-B
W-B
W
E2
S1
(BAT)
10A
DOME
2
1
LG
W
Q14
Roof Console Box Assembly
2
B
Map Lamp
CTY
E
3
1
Q9
Room Lamp (Center)
3
DOOR
OFF
ON
1
2
W
15
EQ1
6
IR
13
ID
LG
W
W
W
W