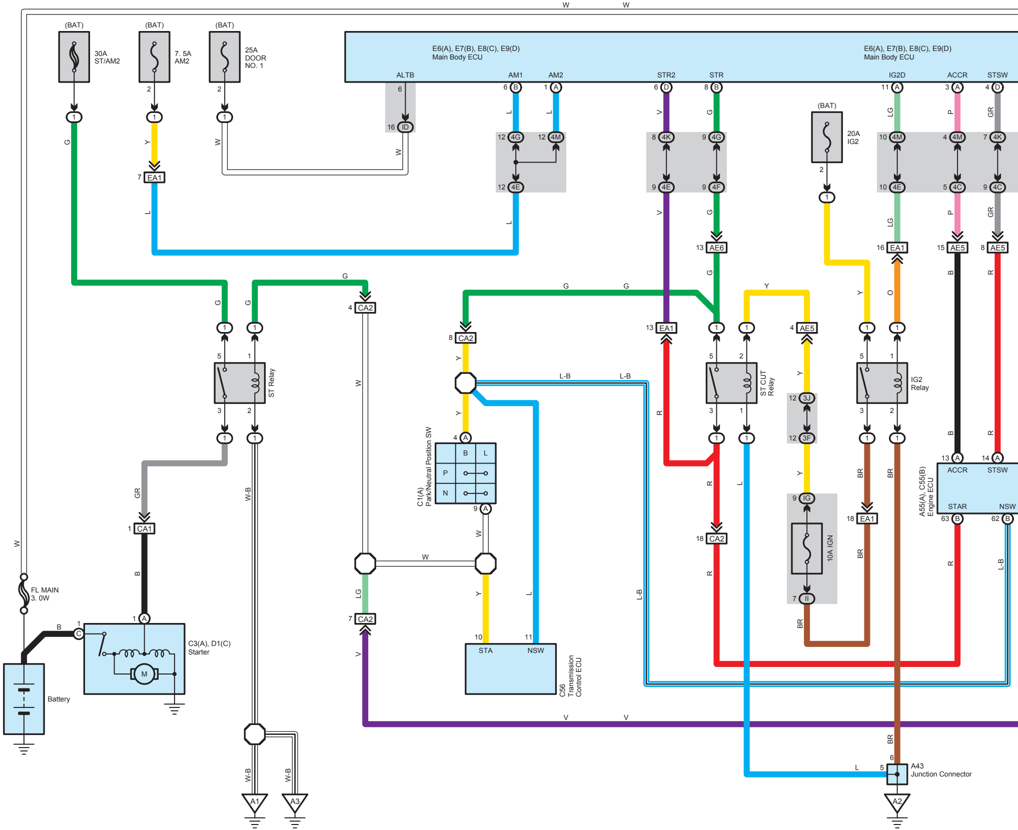

(BAT)
30A ST/AM2
(BAT)
7. 5A AM2
(BAT)
25A DOOR NO. 1
E6(A), E7(B), E8(C), E9(D) Main Body ECU
ALTB
AM1
AM2
STR2
STR
E6(A), E7(B), E8(C), E9(D) Main Body ECU
IG2D
ACCR
STSW
(BAT)
20A IG2
EA1
4G
4M
4E
4K
4F
AE6
AE5
4C
CA2
ID
ST Relay
ST CUT Relay
IG2 Relay
C1(A) Park/Neutral Position SW
B
L
P
N
CA1
3J
3F
IG
10A IGN
II
A55(A), C55(B) Engine ECU
ACCR
STSW
STAR
NSW
FL MAIN 3. 0W
Battery
C3(A), D1(C) Starter
M
C56 Transmission Control ECU
STA
NSW
A43 Junction Connector
A1
A3
A2
W
G
Y
L
V
R
LG
P
GR
B
O
BR
L-B
W-B

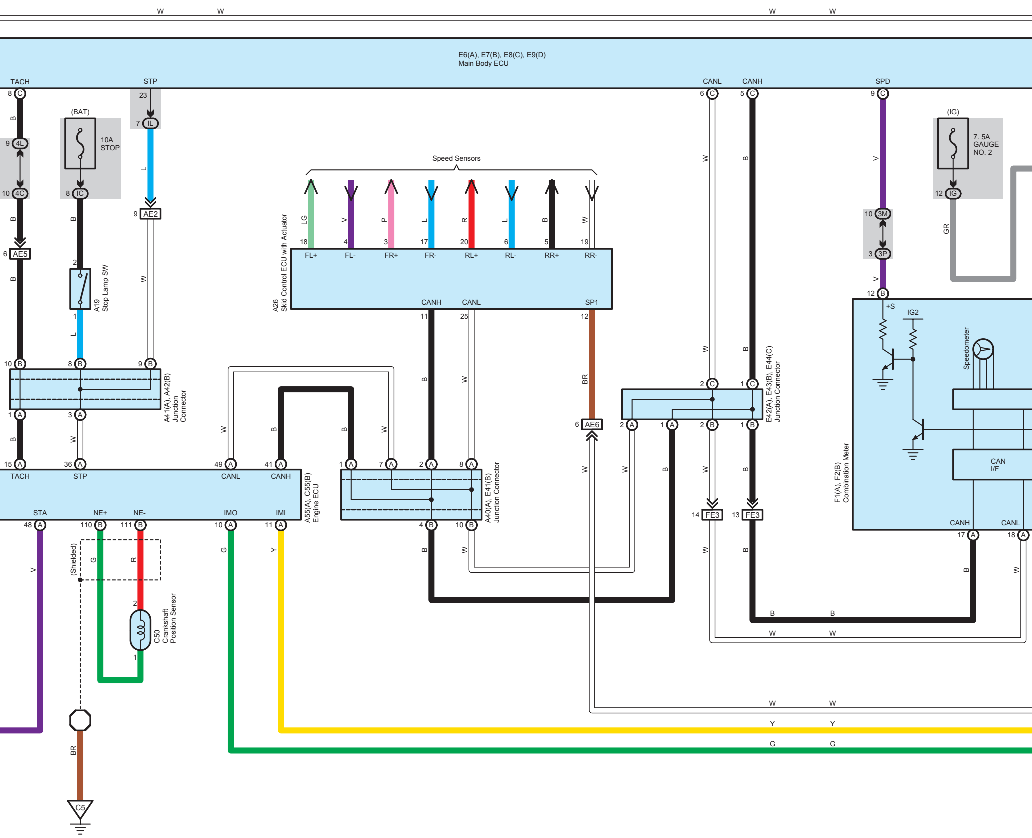
E6(A), E7(B), E8(C), E9(D)
Main Body ECU
TACH
STP
CANL
CANH
SPD
(BAT)
10A
STOP
(IG)
7. 5A
GAUGE
NO. 2
Speed Sensors
LG
V
P
L
R
L
B
W
FL+
FL-
FR+
FR-
RL+
RL-
RR+
RR-
A26
Skid Control ECU with Actuator
CANH
CANL
SP1
A19
Stop Lamp SW
AE5
AE2
AE6
4L
4C
IC
IL
IG
3M
3P
A41(A), A42(B)
Junction
Connector
E42(A), E43(B), E44(C)
Junction Connector
A40(A), E41(B)
Junction Connector
A55(A), C55(B)
Engine ECU
TACH
STP
CANL
CANH
STA
NE+
NE-
IMO
IMI
(Shielded)
C50
Crankshaft
Position Sensor
C5
FE3
FE3
F1(A), F2(B)
Combination Meter
+S
IG2
Speedometer
CAN
I/F
CANH
CANL
BR
GR
Y
G
W
B
V

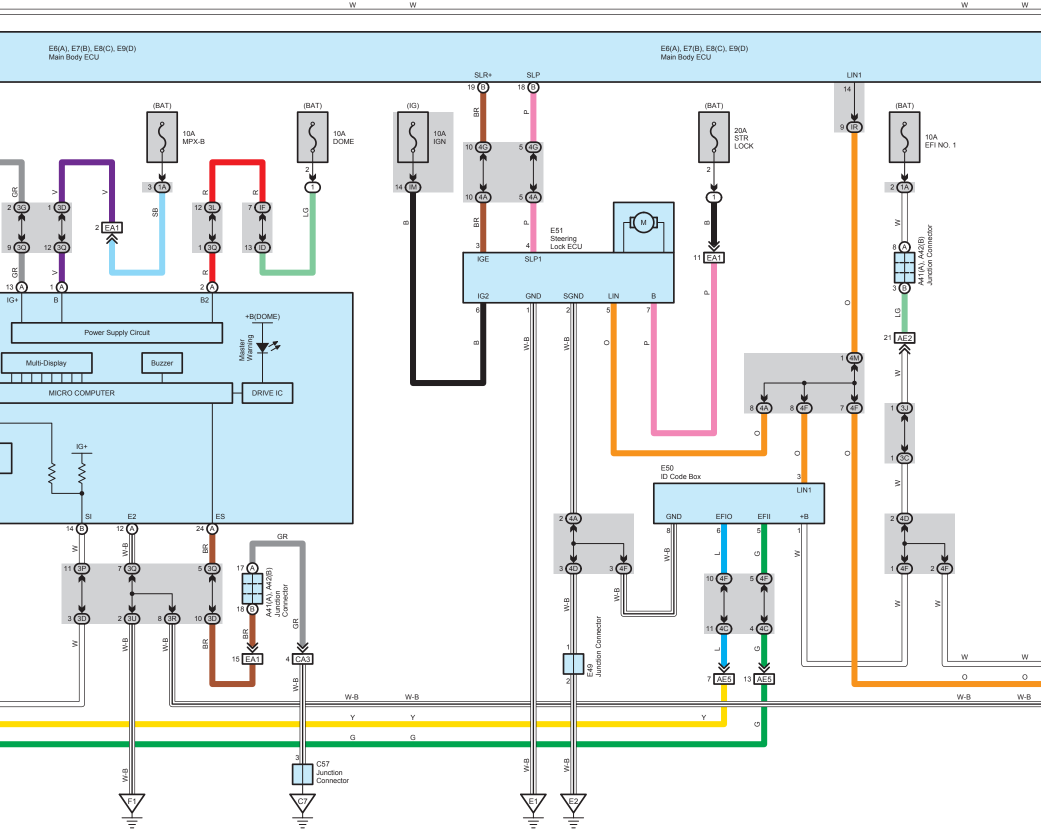
W
W
W
W
E6(A), E7(B), E8(C), E9(D)
Main Body ECU
E6(A), E7(B), E8(C), E9(D)
Main Body ECU
SLR+
SLP
LIN1
19 B
18 B
14
9 IR
(BAT)
10A
MPX-B
(BAT)
10A
DOME
(IG)
10A
IGN
(BAT)
20A
STR
LOCK
(BAT)
10A
EFI NO. 1
BR
P
10 4G
5 4G
10 4A
5 4A
3 1A
2
1
14 IM
2 1A
GR
V
V
SB
R
R
LG
B
2 3G
1 3D
2 EA1
12 3L
7 IF
9 3Q
12 3Q
1 3Q
13 ID
13 A
1 A
2 A
IG+
B
B2
Power Supply Circuit
+B(DOME)
Master
Warning
Multi-Display
Buzzer
MICRO COMPUTER
DRIVE IC
IG+
SI
E2
ES
14 B
12 A
24 A
E51
Steering
Lock ECU
M
3
4
IGE
SLP1
IG2
GND
SGND
LIN
B
6
1
2
5
7
W-B
O
P
11 EA1
8 A
3 B
A41(A), A42(B)
Junction Connector
21 AE2
1 4M
8 4A
8 4F
7 4F
1 3J
1 3C
2 4D
1 4F
2 4F
E50
ID Code Box
LIN1
GND
EFIO
EFII
+B
8
6
5
1
2 4A
3 4D
3 4F
10 4F
5 4F
11 4C
4 4C
L
G
7 AE5
13 AE5
E49
Junction Connector
11 3P
7 3Q
5 3Q
3 3D
2 3U
8 3R
10 3D
17 A
18 B
A41(A), A42(B)
Junction
Connector
GR
15 EA1
4 CA3
C57
Junction
Connector
W-B
Y
G
O
F1
C7
E1
E2

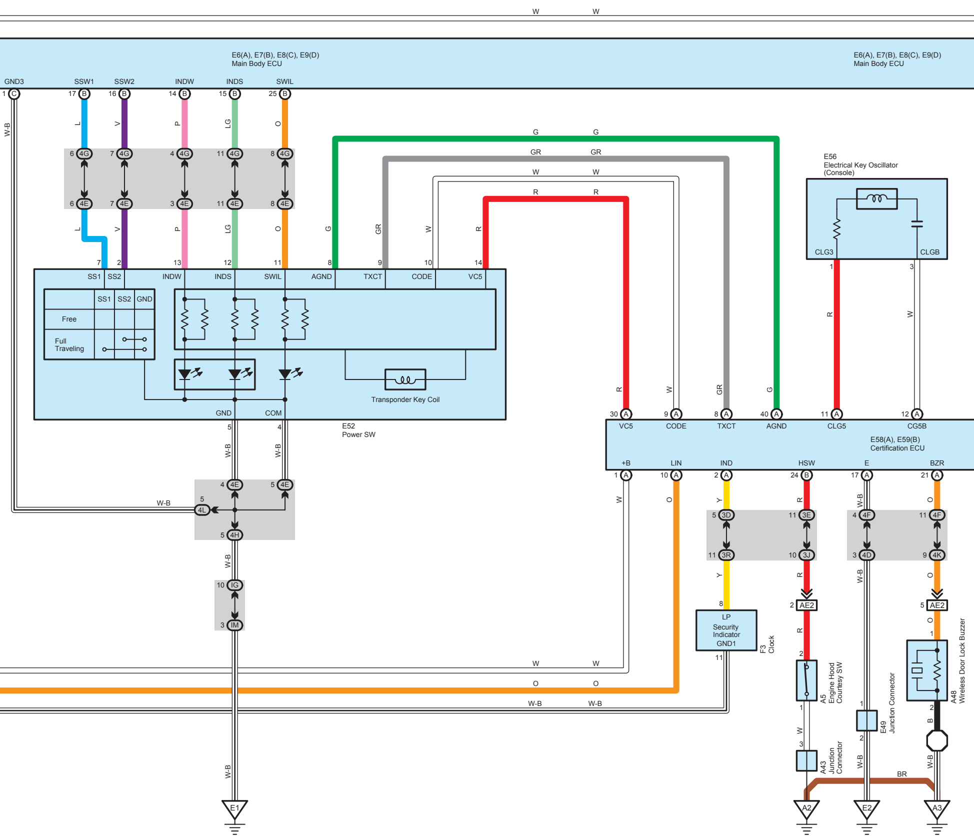
E6(A), E7(B), E8(C), E9(D)
Main Body ECU
GND3
SSW1
SSW2
INDW
INDS
SWIL
E6(A), E7(B), E8(C), E9(D)
Main Body ECU
E56
Electrical Key Oscillator
(Console)
CLG3
CLGB
SS1
SS2
INDW
INDS
SWIL
AGND
TXCT
CODE
VC5
SS1
SS2
GND
Free
Full
Traveling
Transponder Key Coil
GND
COM
E52
Power SW
VC5
CODE
TXCT
AGND
CLG5
CG5B
E58(A), E59(B)
Certification ECU
+B
LIN
IND
HSW
E
BZR
LP
Security
Indicator
GND1
F3
Clock
A5
Engine Hood
Courtesy SW
A43
Junction
Connector
E49
Junction Connector
A48
Wireless Door Lock Buzzer
E1
A2
E2
A3
W
G
GR
R
W-B
L
V
P
LG
O
Y
B
BR

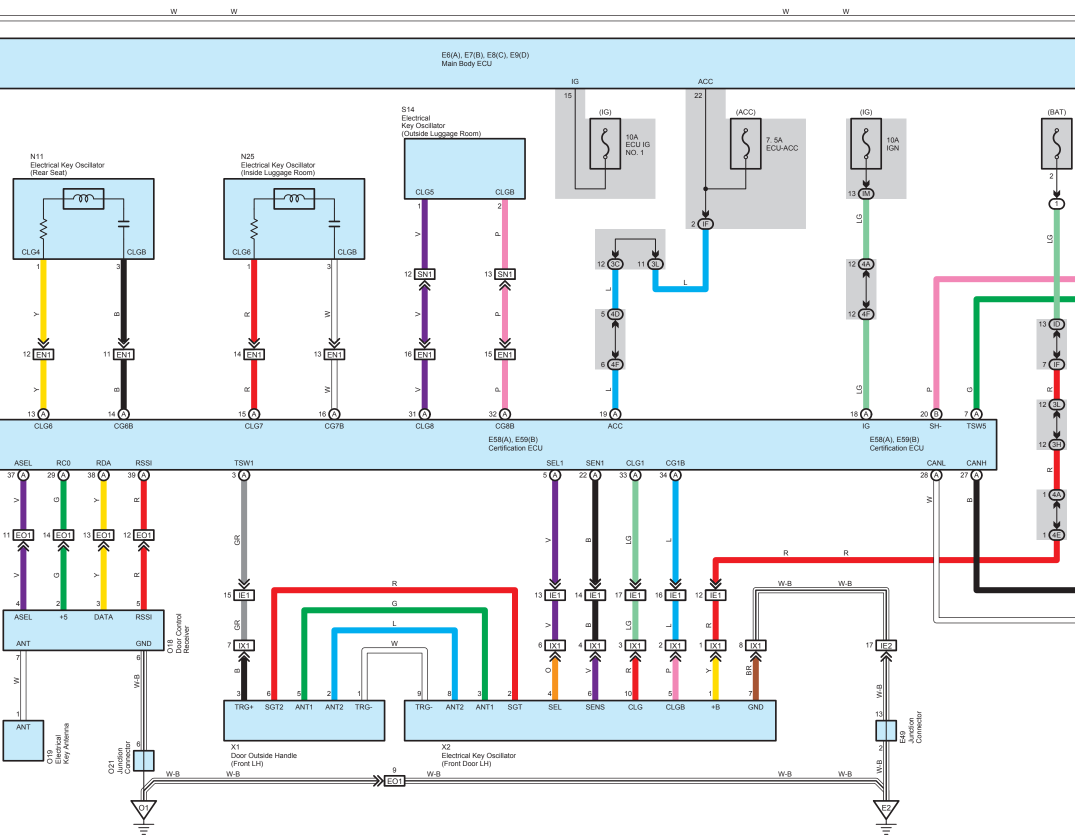
E6(A), E7(B), E8(C), E9(D)
Main Body ECU
IG
ACC
15
22
(IG)
10A
ECU IG
NO. 1
(ACC)
7. 5A
ECU-ACC
(IG)
10A
IGN
(BAT)
2
13 IM
1
N11
Electrical Key Oscillator
(Rear Seat)
CLG4
CLGB
N25
Electrical Key Oscillator
(Inside Luggage Room)
CLG6
CLGB
S14
Electrical
Key Oscillator
(Outside Luggage Room)
CLG5
CLGB
1
2
12 SN1
13 SN1
2 IF
12 3C
11 3L
L
5 4D
6 4F
12 4A
12 4F
13 ID
7 IF
12 3L
12 3H
1 4A
1 4E
12 EN1
11 EN1
14 EN1
13 EN1
16 EN1
15 EN1
Y
B
R
W
V
P
L
LG
G
13 A CLG6
14 A CG6B
15 A CLG7
16 A CG7B
31 A CLG8
32 A CG8B
19 A ACC
18 A IG
20 B SH-
7 A TSW5
E58(A), E59(B)
Certification ECU
E58(A), E59(B)
Certification ECU
ASEL 37 A
RC0 29 A
RDA 38 A
RSSI 39 A
TSW1 3 A
SEL1 5 A
SEN1 22 A
CLG1 33 A
CG1B 34 A
CANL 28 A
CANH 27 A
11 EO1
14 EO1
13 EO1
12 EO1
4
2
3
5
ASEL
+5
DATA
RSSI
ANT
GND
O18
Door Control
Receiver
7
6
W
W-B
1
ANT
O19
Electrical
Key Antenna
6
O21
Junction
Connector
GR
15 IE1
7 IX1
B
R
G
L
W
3 TRG+
6 SGT2
5 ANT1
2 ANT2
1 TRG-
9 TRG-
8 ANT2
3 ANT1
2 SGT
X1
Door Outside Handle
(Front LH)
X2
Electrical Key Oscillator
(Front Door LH)
13 IE1
14 IE1
17 IE1
16 IE1
12 IE1
6 IX1
4 IX1
3 IX1
2 IX1
1 IX1
8 IX1
O
V
R
P
Y
BR
4 SEL
6 SENS
10 CLG
5 CLGB
1 +B
7 GND
R
W-B
17 IE2
13
2
E49
Junction
Connector
W-B
9
EO1
O1
E2

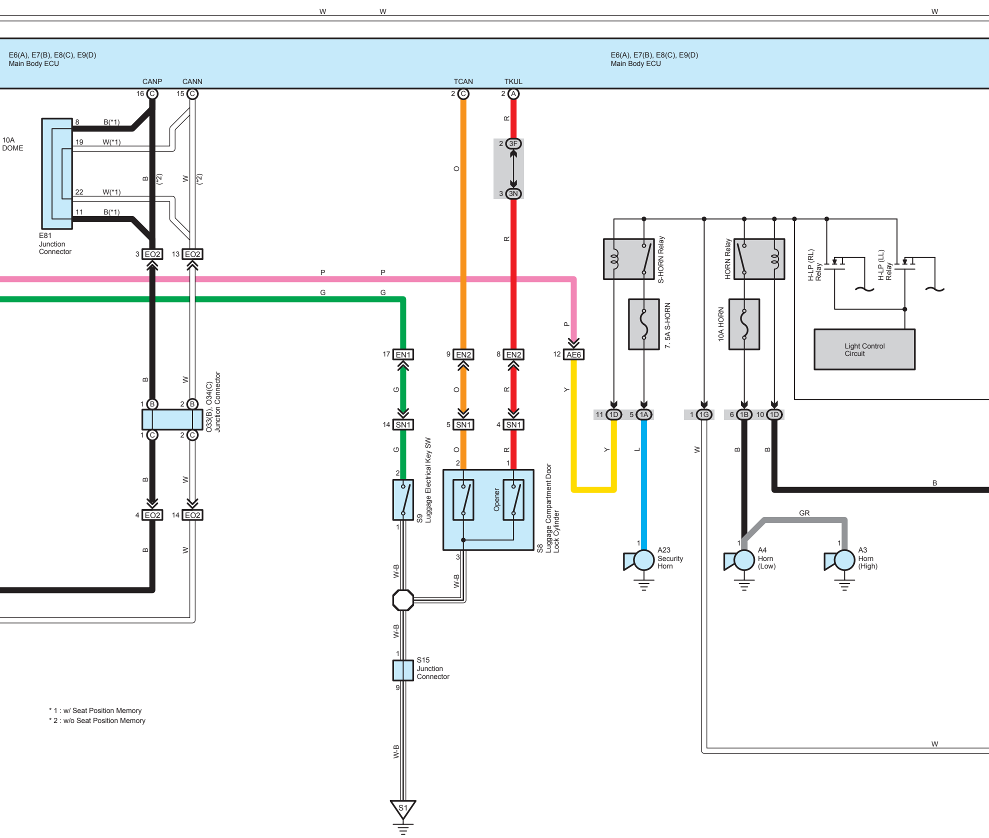
W
W
W
E6(A), E7(B), E8(C), E9(D)
Main Body ECU
E6(A), E7(B), E8(C), E9(D)
Main Body ECU
CANP
CANN
TCAN
TKUL
16 C
15 C
2 C
2 A
10A DOME
8 B(*1)
19 W(*1)
22 W(*1)
11 B(*1)
B (*2)
W (*2)
E81 Junction Connector
3 EO2
13 EO2
R
2 3F
3 3N
O
R
P
P
G
G
P
17 EN1
9 EN2
8 EN2
12 AE6
G
O
R
Y
14 SN1
5 SN1
4 SN1
G
O
R
2
2
1
S9 Luggage Electrical Key SW
Opener
S8 Luggage Compartment Door Lock Cylinder
1
3
W-B
W-B
W-B
W-B
1
S15 Junction Connector
9
S1
B
W
1 B
2 B
1 C
2 C
O33(B), O34(C) Junction Connector
B
W
4 EO2
14 EO2
B
W
S-HORN Relay
7. 5A S-HORN
HORN Relay
10A HORN
H-LP (RL) Relay
H-LP (LL) Relay
Light Control Circuit
11 1D
5 1A
1 1G
6 1B
10 1D
Y
L
W
B
B
B
GR
1
A23 Security Horn
1
A4 Horn (Low)
1
A3 Horn (High)
W

* 1 : w/ Seat Position Memory
* 2 : w/o Seat Position Memory

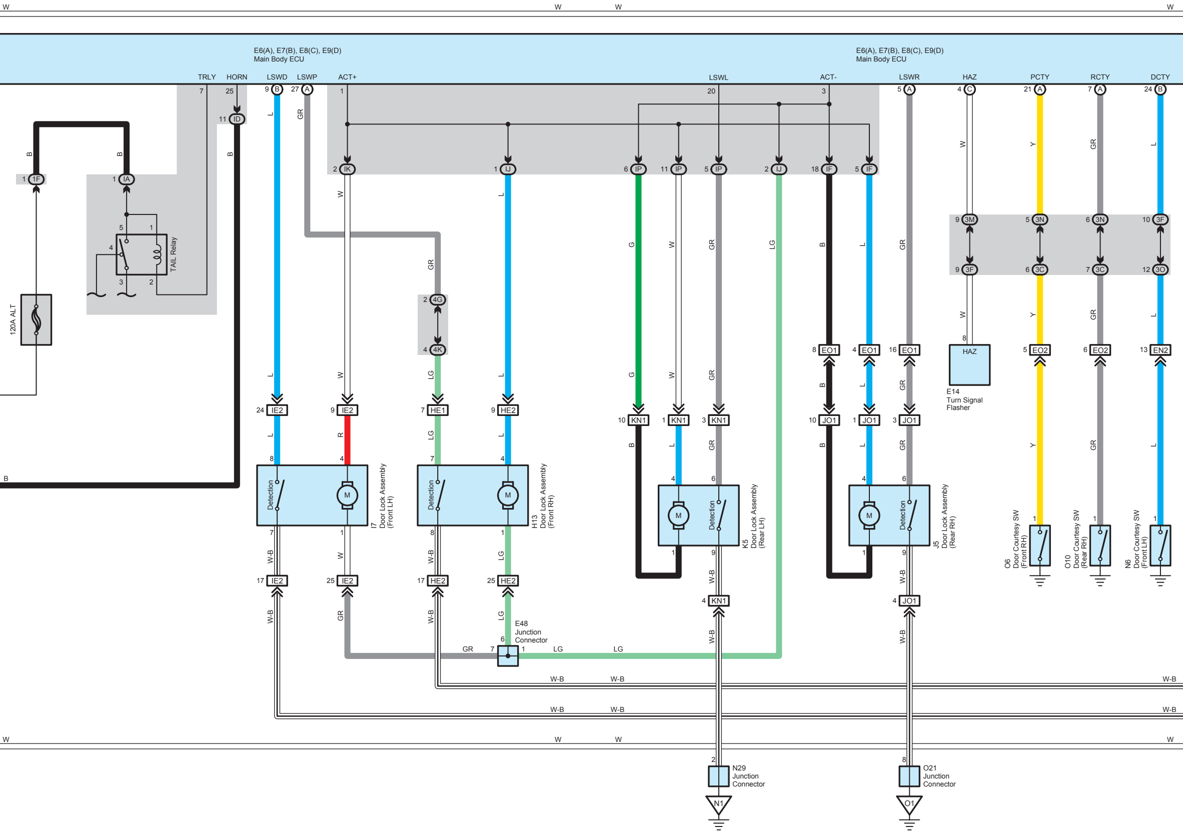
E6(A), E7(B), E8(C), E9(D)
Main Body ECU
E6(A), E7(B), E8(C), E9(D)
Main Body ECU
TRLY
HORN
LSWD
LSWP
ACT+
LSWL
ACT-
LSWR
HAZ
PCTY
RCTY
DCTY
TAIL Relay
120A ALT
I7
Door Lock Assembly
(Front LH)
H13
Door Lock Assembly
(Front RH)
K5
Door Lock Assembly
(Rear LH)
J5
Door Lock Assembly
(Rear RH)
Detection
M
E14
Turn Signal
Flasher
HAZ
O6
Door Courtesy SW
(Front RH)
O10
Door Courtesy SW
(Rear RH)
N6
Door Courtesy SW
(Front LH)
E48
Junction
Connector
N29
Junction
Connector
O21
Junction
Connector
N1
O1
1F
IA
ID
IK
IJ
IP
IF
4G
4K
3M
3N
3F
3C
3O
IE2
HE1
HE2
KN1
EO1
JO1
EO2
EN2
W
B
L
GR
LG
G
R
Y
W-B

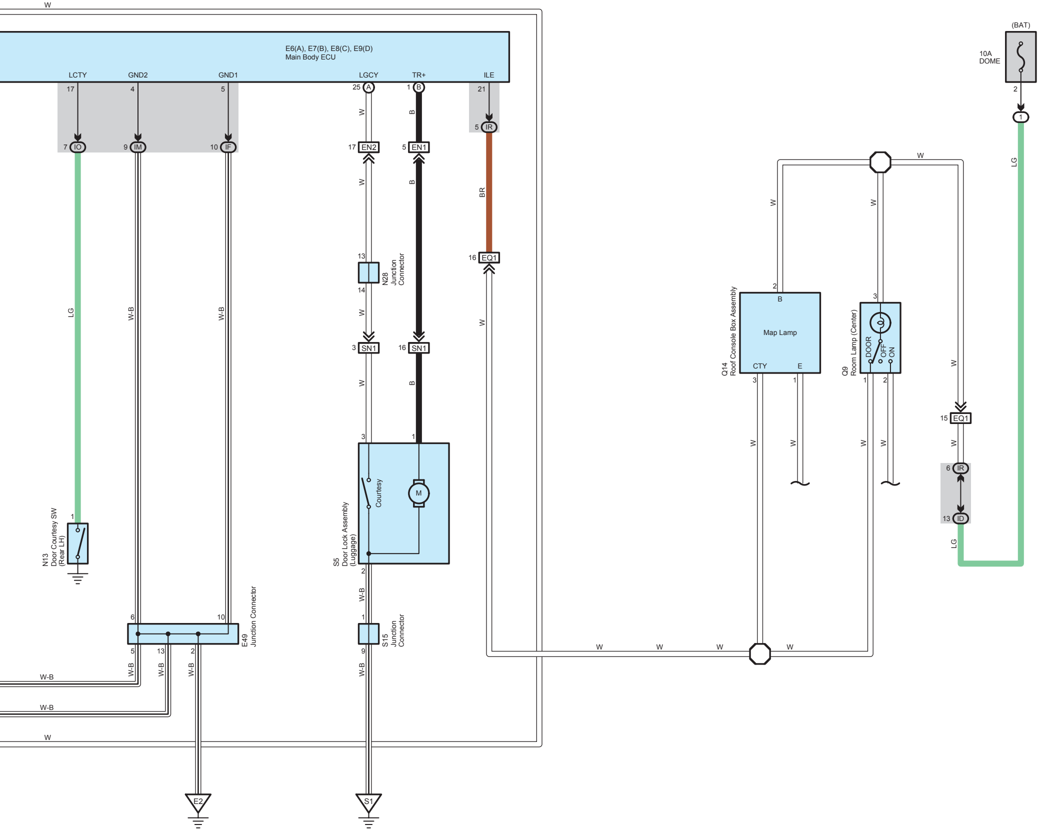
W
E6(A), E7(B), E8(C), E9(D)
Main Body ECU
LCTY
GND2
GND1
LGCY
TR+
ILE
17
4
5
25 A
1 B
21
5 IR
7 IO
9 IM
10 IF
17 EN2
5 EN1
W
B
BR
16 EQ1
13
N28
Junction
Connector
14
3 SN1
16 SN1
LG
W-B
W-B
1
N13
Door Courtesy SW
(Rear LH)
3
1
Courtesy
M
S5
Door Lock Assembly
(Luggage)
2
W-B
1
S15
Junction
Connector
9
6
10
E49
Junction Connector
5
13
2
W-B
W-B
W-B
E2
S1
(BAT)
10A
DOME
2
1
LG
W
2
B
Map Lamp
Q14
Roof Console Box Assembly
CTY
E
3
1
3
Q9
Room Lamp (Center)
DOOR
OFF
ON
1
2
15 EQ1
6 IR
13 ID
LG
W