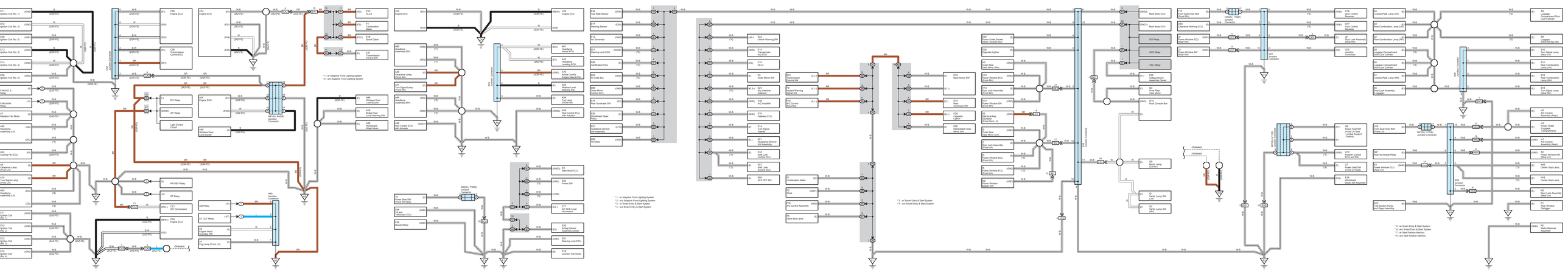
C11 Ignition Coil No. 1
C12 Ignition Coil No. 3
C38 Ignition Coil No. 5
C13 Ignition Coil No. 2
C14 Ignition Coil No. 4
C39 Ignition Coil No. 6
F16 NO. 2 Fuse
F15 MAIN Fuse
A7 Radiator Fan Motor
A8 Headlamp Assembly (LH)
A34 Cooling Fan ECU
A9 Clearance Lamp (Front LH)
A10 Turn Signal Lamp (Front LH)
A63 Headlamp Assembly (LH)
C171 Ignition Coil (No. 1)
C172 Ignition Coil (No. 3)
C173 Ignition Coil (No. 5)
C174 Ignition Coil (No. 2)
C175 Ignition Coil (No. 4)
C176 Ignition Coil (No. 6)
C01 Connector
C06 Engine ECU
C06 Transmission Control ECU
A14 Engine ECU
A14 Engine ECU
A14 Engine ECU
A14 Engine ECU
A14 Engine ECU
A14 Engine ECU
A14 MAIN, ABS Connector
A44 Wireless Door Lock Buzzer
EFI Relay
A/F Relay
Light Control Unit
RR OFF Relay
ST Relay
C21 A/C Compressor
C24 Engine ECU
(Shielded)
E10 DLC3
F1 Combination Meter
E18 Spiral Cable
E31 Transmission Control SW
A48 Wireless Door Lock Buzzer
A16 Brake Fluid Level Warning Sw.
A59 Windshield Wiper Motor
C02 Relay
ST CUT Relay
A6 Engine Hood Position SW
A1 Fog Lamp (Front LH)
A43 Junction Connector
* 1 : w/ Adaptive Front-Lighting System
* 2 : w/o Adaptive Front-Lighting System
C24 Engine ECU
C06 Engine ECU
A61 Headlamp Swivel ECU
A61 Headlamp Swivel ECU
A70 Active Control Engine Mount ECU
A37 Washer Level Warning SW
A34 Fog Lamp (Front RH)
A30 Seat Control ECU with Actuator
A30 Seat Control ECU with Actuator
A6 Headlamp Assembly (RH)
A9 Clearance Lamp (Front RH)
A10 Turn Signal Lamp (Front RH)
A63 Headlamp Assembly (RH)
A30 Seat Control ECU with Actuator
C02(A), T16(B) Junction Connector
Power Seat SW (Front RH Seat)
Fuel Transmission ECU
SW Sensor Motor
C06 Main Body ECU
E52 Power SW
A77 Shift Lever Illumination
A30 Airbag Sensor Assembly Center
Steering Lock ECU
E79 Junction Connector
* 1 : w/ Adaptive Front-Lighting System
* 2 : w/o Adaptive Front-Lighting System
* 3 : w/ Smart Entry & Start System
* 4 : w/o Smart Entry & Start System
C34 Yaw Rate Sensor
A17 Steering Sensor
A11 Steering Gear
A11 Steering Lock ECU
C08 Immobilizer ECU
A50 ST Code Box
A48 Door Lock Mirror Control ECU
A24 Yaw Sensitivity SW
A24 Yaw Sensitivity SW
C09 Intermittent Wiper
A47 Headlamp Dimmer SW Assembly
C04 Fr Motor
A11 Transmission Control SW
A4 Hazard Warning Signal SW
A4 A/C Control Assembly
C10 Combination Meter
A4 Clock
A4 A/C Control Assembly
A4 Door Box Lamp
E22 Unlock Warning SW
E16 Transponder Key ECU
E10 DLC3
E1 Outer Mirror SW
E24 Key Interlock Switch
E38 A/C Amplifier
E70 Gateway ECU
E14 Turn Signal Flasher
E3 Hazard Dimmer SW Assembly
E32 Shift Lock Control ECU
E57 Shift Lock Control ECU
E69 A/T S OFF SW
E73 Back Sonar SW
E74 Rear Sunshade SW
E28 Cigarette Lighter
E36 Retractable Outer Mirror SW
* 3 : w/ Smart Entry & Start System
* 4 : w/o Smart Entry & Start System
C36 Power Outlet Socket (Rear Control Box)
C38 Cigarette Lighter
A14 Power Window ECU (Front Left)
A14 Power Window ECU (Front Right)
A14 Power Window SW (Front Left)
A14 Power Window SW (Front Right)
A14 Power Window ECU (Rear Left)
A14 Power Window SW (Rear Left)
A14 Power Window ECU (Rear Right)
A14 Power Window SW (Rear Right)
A14 Power Window Power SW
A14 Power Window Power SW
A14 Power Window Power SW